Q8 Face temperature Measurement and Recgonition

Face Recognition and Face Temperature Integrated Detector

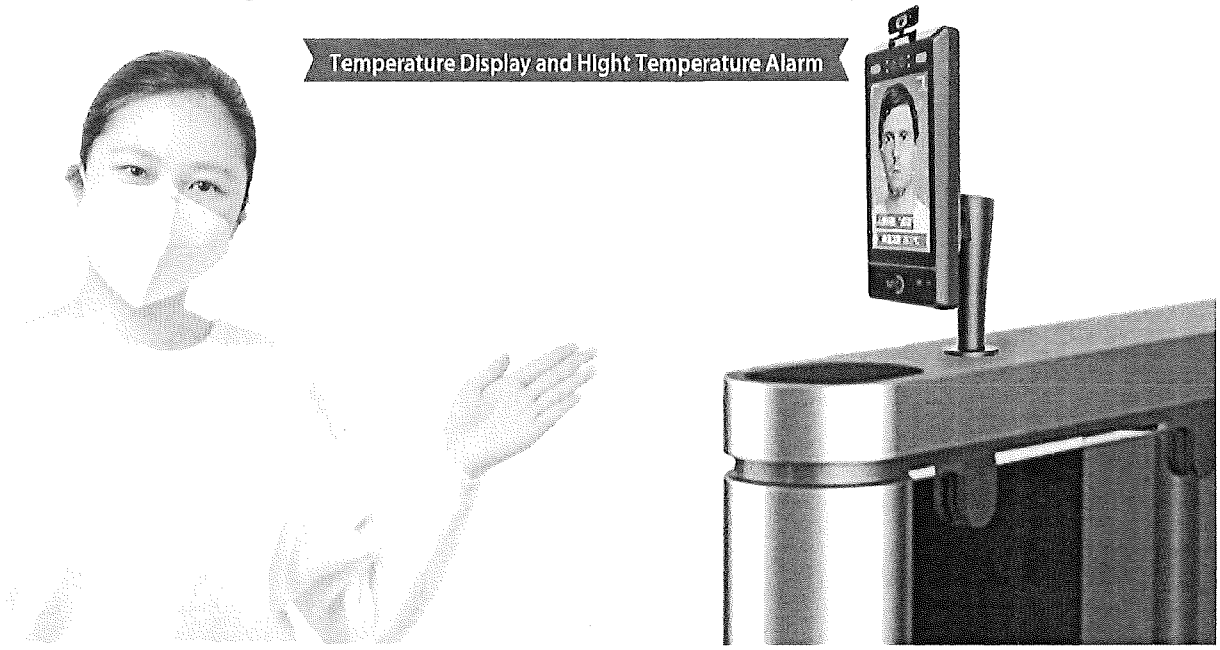

1. Product model Q8 (Temperature detection version)

2. Introduction

Q8 Face Recognition and Face Temperature Integrated Detector is an AI access control terminal independently developed and produced by Shenzhen Technology Group Co., Ltd. based on face recognition algorithm and infra-red thermal imaging temperature measurement algorithm. It has the functions of binocular live anti-counterfeiting, temperature display and high temperature alarm. The optional built-in second-generation ID card verification module enables two product forms as "human and card comparison + temperature detection" and "human faces comparison + body temperature detection" to meet different application scenarios. At the same time, the interface is opened to customers for add-on function development to help customers from all walks of life in completing quick face recognition and the temperature detection. Menpad spare no effort in the development of this product to overcome the difficulties arising from the epidemic.

It can be used in schools, communities, airports, hotels, hospitals and other public places where people are gathering.

3. Product characteristics

- Face recognition: using the international leading face recognition algorithm technology for face detection;
- Temperature detection: using infra-red thermal imaging technology for temperature detection;
- High temperature alarm: the equipment will raise the alarm automatically with the detection of body temperature higher than 37.3℃, which is conducive to the control of the key personnel in the epidemic management;
- Supports to swipe ID card: optional built-in second-generation ID card verification module can be used to perform personnel identification and body temperature detection;

- Supports 4G function: optional 4G module can be used for data transmission in temporarily established scenarios and remote scenarios without network cable access;
- Supports strong light: can be used in outdoor strong light, shadow, back-light, and other harsh illumination environment;
- The adoption of RK3399: The powerful CPU enables stable operation of the equipment in the actual scene;
- Supports infra-red sensing of human body: when the human body is detected, the fill light and the panel will be turned on. The face recognition is then started afterwards. The panel and fill light will automatically be turned off within 5S after there is no face detection. Moreover, the fill light can be turned on and off and the brightness can be adjusted manually in the operating system.
- Supports voice/video call: visitors can call through intercom system.
- The use of binocular cameras: The camera supports live detection, reduces the impact of facial expressions and the risk of photo fraud during the day and night.
- Supports add-on function development: The open interface helps our partners to quickly upgrade industry applications
- Supports 485 signal / switch signal / Wiegand interface signal output, and can transmit data with different access control equipment and gate equipment.
- Supports personalized customization
- Supports cloud and local identification
- Supports storage of more than 30000 faces
- Supports wall mounting, gate hanger mounting, and pole hanger mounting in various scenarios.

4. Product size

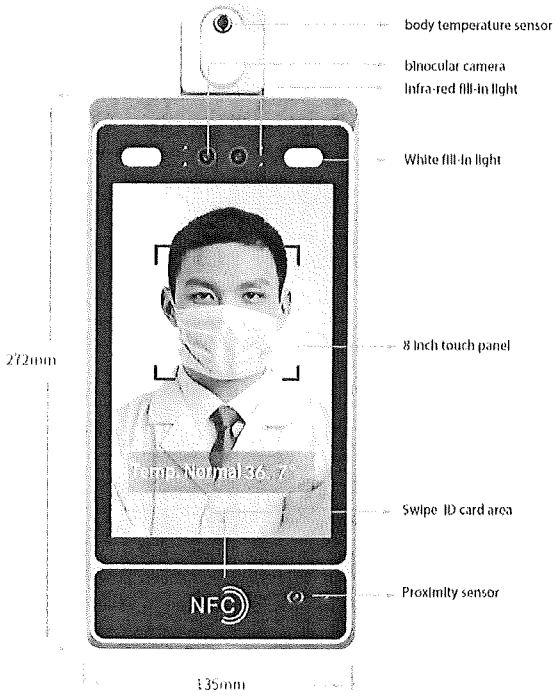

5. Technical Specification

Technical specification of MENPAD Q8 Face Recognition and Face Temperature Integrated Detector		
Items		Parameters
Face recognition part		
System configuration	Operating System	Android 7.1
	CPU	RK3399
	RAM	4GB
	Flash	16GB
	LCD	8 inch LCD and capacitive Touch Panel resolution: 1280 * 800
	Camera	Binocular camera: RGB 2 million pixels, supports Wide Dynamic Range, Dynamic Range 115dB, strong light;
		Monocular camera: (optional) RGB 2 million pixels, supports Wide Dynamic Range, Dynamic Range 115dB, strong light
		3D structured light: (optional)
	Live detection	Supports
Fill-in light	LED	White light, fill-in light source for RGB camera, control interface provided in SDK
	NIR LED	850nm infra-red LED light, IR camera fill-in light source, Control interface is provided in SDK.
Hardware function	WIFI	802.11b/g/n，2.4GHz
	Bluetooth	Bluetooth 4.0
	Ethernet port	10M/100M adaptive
Function interface:	USB interface	1 micro USB
	Output relay	Single relay switch (door lock), industrial connector output interface, Control interface is provided in SDK.
	Proximity sensor	Effectively identifies the straight line distance greater than 1m. The distance can be adjusted. The system moreover can be set for automatic dormancy. Control interface is provided in SDK.
	Card reader (NFC tag, RF card)	13.56MHz ； NFC（ISO 144443a，144443b） Control interface is provided in SDK.
	RS485 interface	Half duplex communication, transmission distance greater than 100m, control interface provided in SDK
	Wiegand interface:	Output interface, supports 26 bit and 34 bit Wiegand interface, industrial connector output interface, control interface provided in SDK
The microphone and the speaker	The microphone	Single channel,16 bit high fidelity voice
	The speaker	Single channel, 8 Ω / 2W
Video intercom	Lines & accounts	4 lines, 4 accounts

	Audio coding	Encoding/Decoding: G.711a, G.711u, G.729, G.722, iLBC, SILK、OPUS
	Video encoding	Encoding: H.264, VP8, Decoding: H.264, VP8, H265, MPEG-4
	Video resolution	CIF (352 * 288), QVGA (320 * 240), VGA (640 * 480), 720 (1280 * 720)
	Voice recording	Supports
Management protocol	Web OMC, TR069, SNMP	
size	Size (mm)	272*135*35
Operation environment	Operation temperature	-20 ~ 55℃
	Ambient humidity	10 ~ 90% (non condensing)
Power Supply	Power Supply	12V/2A
	The power adapter	Input AC 220V output DC 12V 2A
Function key	reset	Single reset button
Temperature detection part		
Resolution	16*12	
Field angle	33°*33°	
Temperature detection distance	0.7-1M	
Thermometric error	± 0.3 °, indoor environment at 15-29℃	
Optional		
ID card reader	It supports the verification of the second-generation ID card. Control interface is provided in SDK.	
LTE capabilities	Support 4G and mobile terminals fits all kinds of network for internet access	
Optional	Wall hanger, gate hanger, desktop hanger, pole hanger.	

6. Application scenario

It can be used in schools, communities, airports, hotels, hospitals and other public places where people are gathering.

7. Potential partners

We can not only provide the complete equipment for face recognition and temperature detection terminal to customers, but also face recognition terminal part to adapt to customer algorithm. The flexible cooperation direction serves only to make face recognition simpler and overcome the difficulties arising from the epidemic with advanced security products!

8. Drawing size

8.1. Wall hanger size:

MENPAD Q8 Face Recognition and Face Temperature Integrated Detector

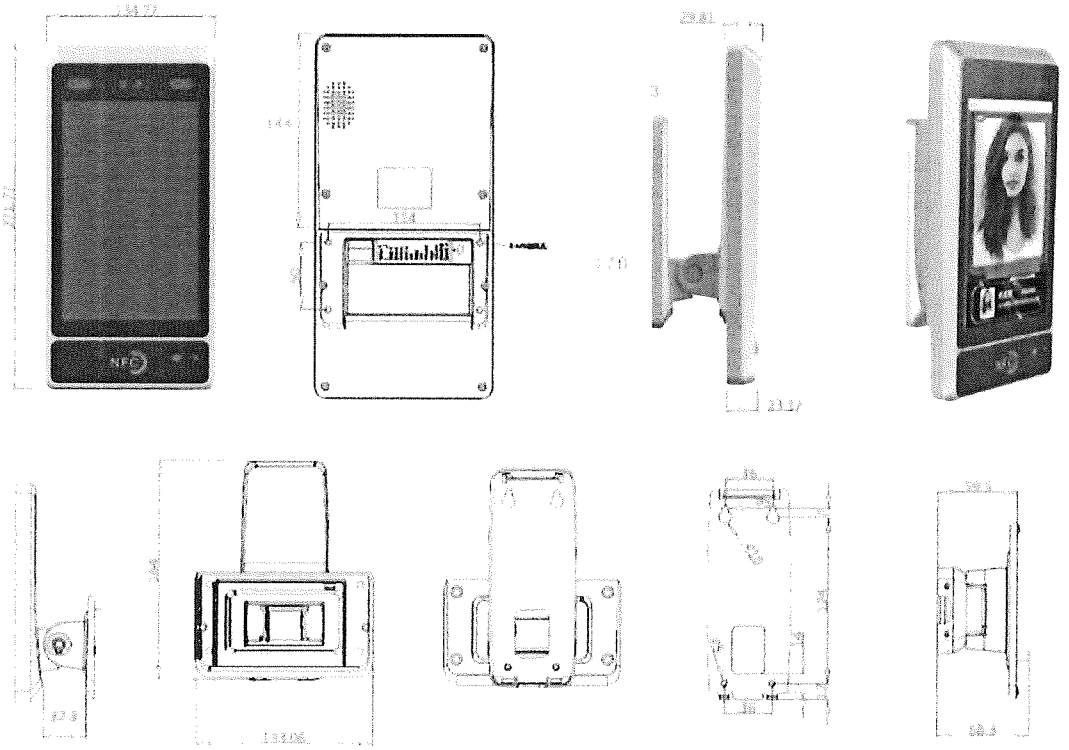

8.2. gate hanger size:

unit:mm MENPAD Q8 Face Recognition and Face Temperature Integrated Detector

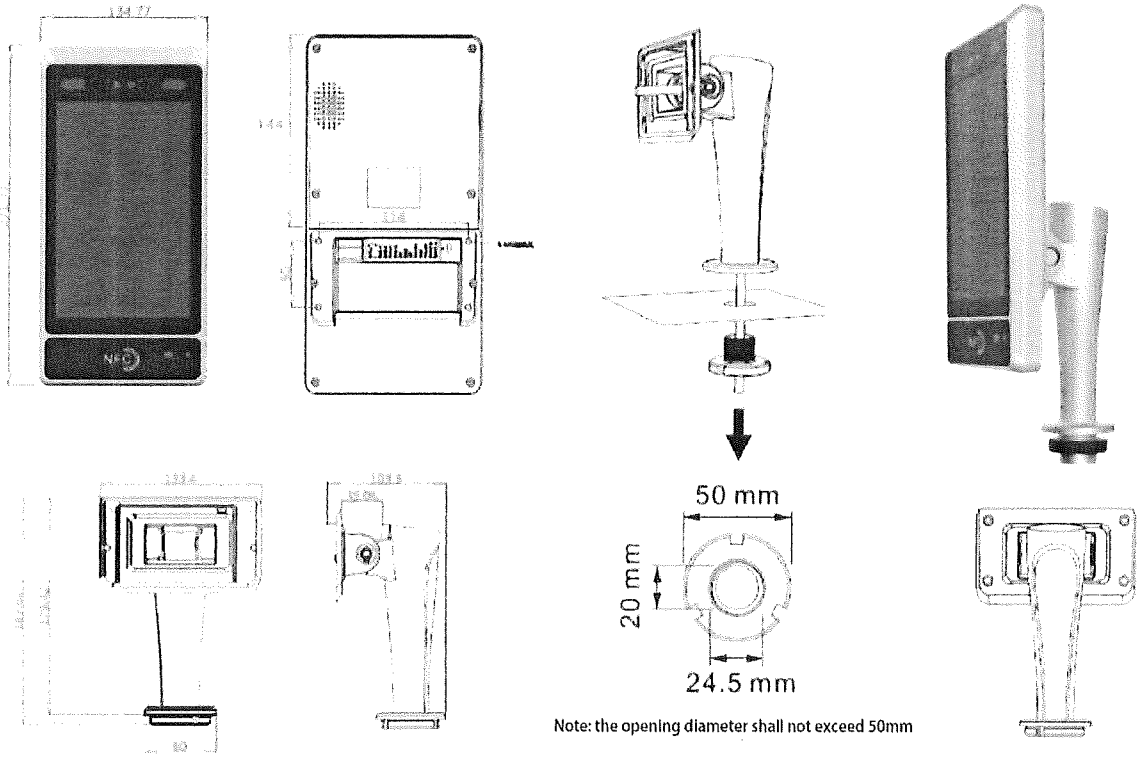

Note: the opening diameter shall not exceed 50mm

Consultants：

Mr Jackliu ， Mobile: 13923700345

Address: Baohuasen International Centre, No.145, Qianjin Second Road, Bao'an District, Shenzhen, Guangdong Province