

LIFTING LUG DETAIL
(3) PLACES
SCALE: 1"=1'-0"

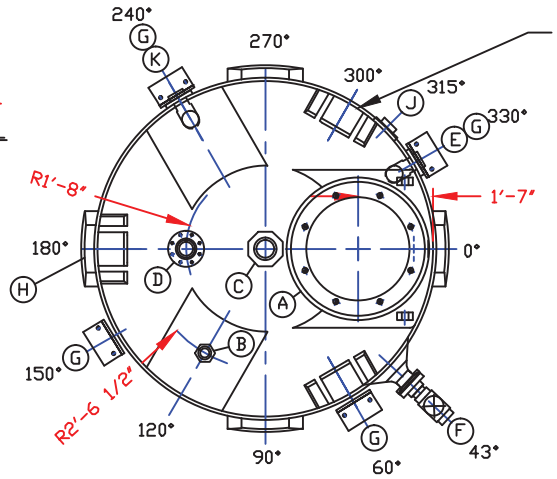

MOLDED-IN
LIFTING LUG PAIRS
(3) PLACES
USE MINIMUM OF (1) LUG AT
EACH LOCATION FOR LIFTING
(SEE DETAIL)

NOZZLE SCHEDULE & ACCESSORIES

SERVICE	MK	STOCK NO	SIZE	FITTING	DEG	ELEV
MANWAY	A	3218	24"	CVR ASMBLY 24" 8-BLT	0°	DOME
		3228		GSKT 24" MWY COVER 3/8" PE 32" OD X 24" ID		
FILL	B	7117	2"	BHF ASMLY 2" SXT H'WARD PVC/EPDM	120°	DOME
VENT	C	7127	4"	BHF ASMLY 4" SXT H'WARD PVC/EPDM	TDC	DOME
LEVEL	D	5831	3"	UBD FTG 3" FLG STYLE PVC/RYTON/EPDM	180°	DOME
OVERFLOW	E	8701	3"	BLTD FLG FTG SKT 3" ASMLY PE/PVC/SS/EPDM	330°	8'-4"
PLUGGED		2086		SIPHON LEG 3" FLG PVC		
IMFO	F	8471	3"	CMPN FLG FTG 3" SCKT PVC/SS/EPDM SS RING	43°	1 3/4"
		9100/4900		BALL VALVE SXS COMPCT PVC/ PIPE PVC 80		
				(CUSTOMER TO INSTALL BALL VALVE IN FIELD)		
RESTRAINT	G	NS-140	--	MONROE/WVA/EPOXY COATED STEEL	60°	BTM
				INDOOR SEISMIC RESTRAINTS	150°	SIDE
		8909		(4) RC 6" X 9" (EXT) X 5/8" X 10"	240°	WALL
				MS BLUE / POLYURETHANE / EPOXY	330°	
IMFO PAD	H	78000071610		IMFO PAD 7'1" XLPE NAT	ALL	TK BTM
		8339	2"	PLUG 2" RIEKE NAT PE		
DRAIN	J	8701	3"	BLTD FLG FTG 3" SCKT 8-BOLT PVC/SS/EPDM	315°	8"
OVERFLOW	K	8701	3"	BLTD FLG FTG SKT 3" ASMLY PE/PVC/SS/EPDM	240°	8'-4"
		2086		SIPHON LEG 3" FLG PVC (INSTALLED BY GC)		

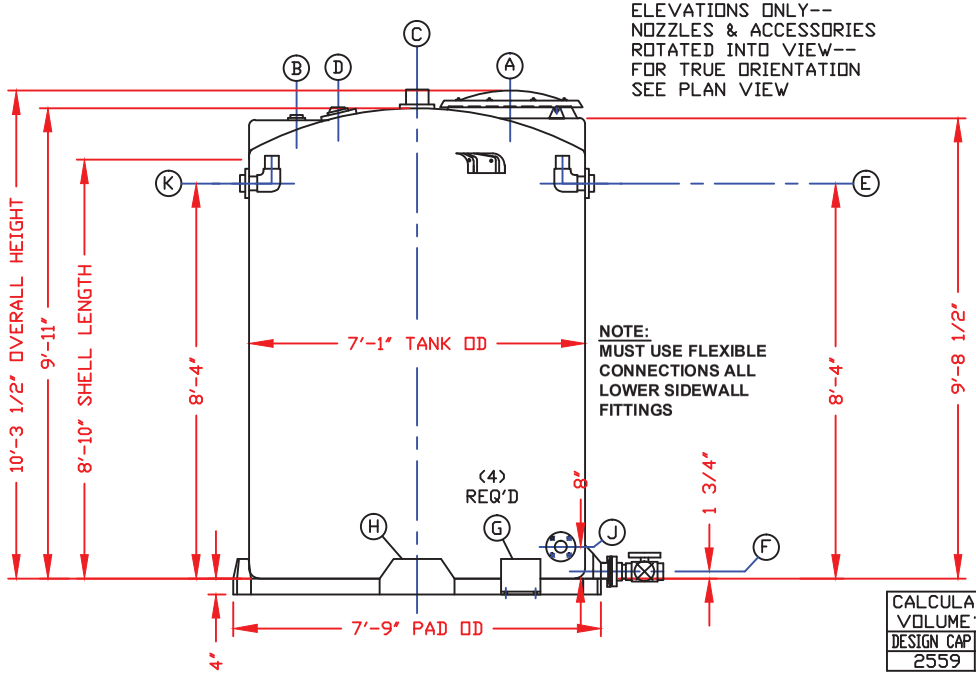

ELEVATIONS ONLY--
NOZZLES & ACCESSORIES
ROTATED INTO VIEW--
FOR TRUE ORIENTATION
SEE PLAN VIEW

NOTE:
MUST USE FLEXIBLE CONNECTIONS ALL LOWER SIDEWALL FITTINGS

CALCULATED CAPACITIES/ VOLUME IN U.S. GALLONS		
DESIGN CAP	DOME VOL	TOTAL VOL
2559	142	2701

EMPTY TANK WEIGHT: 650 LBS.

NOTES
1. THIS IS A COMPUTER GENERATED DWG. DO NOT REVISE BY HAND.
2. DIMENSIONS WILL VARY ±3% DUE TO VARIATIONS IN MULTIPLE MOLDS & CONDITIONS PREVALENT DURING MANUFACTURE & USAGE.
3. MOLDED IN GALLONAGE MARKERS @ APPROX 60° IN 200 GAL INCREMENTS UP TO 2200 GAL. GALLONAGE MARKERS ARE 5" WIDE AND MUST BE AVOIDED WHEN PLACING FITTINGS.
4. TANK DESIGNED FOR 1.9 SpG MAT'L @ 100°F/ATMOS PRESSURE.
5. "AS BUILT" DWG MADE FROM INFORMATION AVAILABLE AFTER TANK MANUFACTURED & SHIPPED.

DWG TITLE
2550 GALLON IMFO TANK
T-902A

1.9 SpG/XLPE/NATURAL
SERVICE: ALUMINUM SULFATE
STOCK NO. 71102550410

SCALE: 3/8"=1'-0"
DATE: 3/14/12

PolyProcessing Company LLC
Central Region
P.O. Box 4150 (71211)
2201 Old Sterlington Rd.
Monroe, LA 71203
(318) 345-7565
FAX (318) 343-8795

DR: C. DAVIES
CK: J. BRANTLEY

NORTHEAST FLUID PO# 2992D
FOR: THE MACMILLAN COMPANY
c/o PETERBOROUGH WWTF

SHEET: 1 OF 1
COMPUTER FILE: NEF2992G
REV: -

G-375