Table of Contents

1 Read this First 1

Warning 1

About this manual 1

Safety 2

Country Specific Conditions 3

End of Life 4

FCC Classification 5

2 Meet your Document System 6

Overview 6

Operating Controls 9

Control Panel 10

Installing the Document Feed Trays 11

High Capacity Vertical Stacker 12

Power Up 13

Home Menu 13

Job Info 14

Side Guides 16

Document Orientation 17

Filling the Document Feeder Tray 18

Loading Envelopes 19

Sealing Envelopes 20

Fill the Sealing Liquid Reservoir 22

Shut Down the System 22

3 Options 23

MaxiFeeder 23

Installing the MaxiFeeder 23

Adjust the maxiFeeder Side Guides 24

Adjust the maxiFeeder Document Separation....25
Feeding documents (MaxiFeeder)....26
High Capacity Document Feeder (HCDF)....26
Installing the HCDF....27
Adjusting the HCDF Side Guides....27
Document Separation for the HCDF....28
Feeding documents (HCDF)....28
Conveyor Stacker....29
Side Exit....29
insert'n Frank / insert'n Mail 30
Mail Piece Production Control....30

4 Processing Mail Sets 31
Introduction....31
Processing a Basic Mail Set....32
Processing a Mail Set with BRE or Inserts....33
Document Separation....34
Adjustment of the Document Stoppers....35
Processing Daily Mail....36
Test Run....37
Adjusting the Address Position....37
Adjusting the Envelope Insert Fingers....38
Verifying the Insert Position....39

5 Working with Jobs 40
What is a job....40
Creating a new job....40
Performing a test run....42
Adjusting the Envelope Position....43
Using a job....44
Editing a job....45
Copying a job....46
Deleting a job....47

Job settings....48
Envelope settings....49
Document settings....50
Fold settings....52
Reading settings (option)....54
Double feed control settings....56
Job name....57
Mailing/Franking settings (option)....57
Mail Piece Production Control settings (option)....58

6 Advanced Settings 59

What are Advanced Setting?....59
Opening the Advanced Settings....60
Changing the Display Settings....61
Viewing System info and Software versions....62
What are licensed options?....63
Activating an option....64
Test Menu....64
Running diagnostics....65
Job Settings (Supervisor)....66
Flap Closer Offset....67
Envelope Clearing....67
System Output....68
Changing Document Offset....69
Changing BRE Offset....69

7 Reading 71

Introduction....71
Reverse reading....72
Document Orientation....73
BCR Code Description....73
Reading a configuration sheet (BCR only)....75
Running a BCR test....77

OMR Code Description....78
Running an OMR test....81

8 Online Services 83

Online Services....83
Start-up Online Services....84
Connecting to the server....85
Viewing the history....86
Viewing messages....86
Installing a new job or new software....87
Configuration Menu....88
Setting the telephone number....89
Setting the prefix....90
Selecting the country....90
Entering date and time....91
Setting the dial tone detection....91
Setting the modem volume....92

9 Operator Maintenance 93

Maintenance Schedule....93
Clean and replace brushes....94
Replace or clean moistening cloth....94
Clean the sensors on the envelope or document path....95
Clean the exit sensors....96
Resetting Photocells....96

10 Fault Finding 97

Error Messages....97
Clearing Stoppages....98
Exit, Sealing and Inserting Area....100
Envelope Hopper....101
Lower Envelope Track....102
PowerFold....103
FlexFeed....104

Collating Area....104
Operator Troubleshooting....105
Trouble Shooting Table....105

11 Specifications 109

Technical Specifications....109
Hopper and Feeder Capacity....110
Configuration Dimensions....110
Document and Insert Specifications....110
Envelope and Document Set Specifications....111
maxiFeeder Specifications....112
High Capacity Vertical Stacker Specifications....113

12 Terminology 115

Terminology....115

1 Read this First

Warning



Ensure you have read and fully understood the safety requirements in this section.

About this manual

Languages

According to the EC (European Commission) declaration following the Low Voltage Directive (2006/95/EC), this operator manual must be available in the national language(s) of the country where the system is delivered. Therefore, if you do not have an operator manual in your country's language(s), contact your authorized distributor.

Software

The software used for the reading option is based in part on the work of the Independent JPEG Group.

Audience

This manual is meant for operators of the document system.

Trademarks

maxiFeeder™, insert'n Frank™, powerFold™, intelliDeck™, flexFeed™ and versaFeeder™ are trademarks of Neopost however the affix ™ will not be used further in this manual.

Symbols

This manual uses the symbols listed below.



WARNING : Indicates a human safety hazard.



ATTENTION : A risk to the equipment or mail could result from an action you may perform.



NOTE : A remark that explains different cases or specificities.



TIP : Advice to help save you time when processing your mail.



SUPERVISOR : Indicates that you have to use the supervisor menu to perform the procedure.

Safety

Warnings

- Disconnect the power supply before performing any maintenance.
- Before connecting the system to the electrical supply, ensure that the system is suitable for the local mains voltage. Refer to the serial plate on your system for voltage requirements.

Precaution

The general process of automated document handling can sometimes create a build up of static electricity. Therefore we recommend that the following measures are taken to reduce the side effects of any electrostatic charge.

- Make sure that you operate the system within the recommended temperature and humidity conditions.
- Make use of antistatic mats where appropriate.
- If necessary, make use of an ionizer to reduce static charge build up in the room where the system is located.

Please contact your supplier for further information.

Safety Precautions

- Only competent, trained personnel should operate this system. If non-trained personnel do operate this system, the manufacturer will not accept responsibility for any resulting accidents or injuries.
- Only skilled persons, who are aware of the risks involved, may open the protective covers.
  For safety reasons, the system will not function when the covers are open.
- Keep long hair, fingers, jewelry, etc. away from rotating and moving parts.
- The power connection must be easily accessible, preferably close to the system.
  For safety reasons, it is essential that the system is connected to a socket outlet that has a protective earth (ground) connection.
- Overcurrent protection in the equipment also relies on the branch circuit protection (max. 20 A).
- The following part(s) is (are) considered the equipment disconnect device(s):
  - Power supply cord plug or appliance coupler.
  - 12-pole connector, located on the right-hand side.



CAUTION: DOUBLE POLE / NEUTRAL FUSING
(this means that after operating of the fuse, parts of the equipment that remain energized, might represent a hazard during servicing.)

Country Specific Conditions

Denmark

In Denmark, certain types of Class 1 appliances may be provided with a plug that does not provide an adequate earth (ground) connection when inserted into a Danish socket outlet. Make sure the system has a good functioning connection that has protective earthing (the plug and socket outlet must match).

Japan

- Establish an earth (ground) connection before connecting the mains plug to the power supply.
- First disconnect the power supply before removing the earth (ground) connection.

End of Life

The objectives of the European Community's environment policy are, in particular, to preserve, protect and improve the quality of the environment, protect human health and utilize natural resources prudently and rationally. That policy is based on the precautionary principle and principles that preventive action should be taken, that environmental damage should as a priority be rectified at source.

Separating waste during collection is the precondition to ensure reuse and recycling of waste. The proper disposal of electrical or electronic equipment is necessary to achieve the chosen level of protection of human health and the environment in the European Community.

More particularly, certain materials and components of waste electrical and electronic equipment need special treatment as improper handling or disposal on or into land, water or air would represent a major threat to the environment and human health.

In order to facilitate collection and treatment separated from normal domestic waste, electrical and electronical equipment is marked with the following logo:

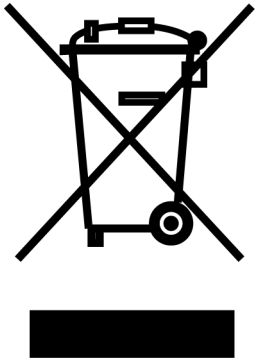

Do not mix with normal domestic waste.

Please use the subjoined return or collection system dedicated to electrical and electronical waste.

Equipment produced after August 13, 2005

By law, not only are you not allowed to dispose of the waste equipment via other waste channels, but we encourage you to actively contribute to the success of such collection and to the common good and better quality of life of present and future generations. For more information on the correct disposal of this product, please contact your local service organization.

FCC Classification

This is a class A product. In a domestic environment this product may cause radio interference in which case the user may be required to take adequate measures.

Note: this equipment has been tested and found to comply with the limits for class A digital device, pursuant to Part 15 of the FCC Rules. These limits are designed to provide reasonable protection against harmful interference when the equipment is operated in a commercial environment. This equipment generates, uses, and can radiate radio frequency energy and, if not installed and used in accordance with this instruction manual, may cause harmful interference to radio communications. Operation of this equipment in a residential area is likely to cause harmful interference in which case the user will be required to correct the interference at his own expense.

2 Meet your Document System

Overview

Introduction

The system is a folding and inserting system for processing mail easily. The system:

- Feeds documents
- Folds the documents
- Inserts the documents into envelopes
- Seals the envelopes
- Stacks the envelopes

Automatic monitoring ensures the correct number of documents per envelope. The system can be operated by means of a user friendly interface. The settings of the system (types of documents, type of envelopes and the type of fold) is recorded in so called jobs. These jobs can be programmed by an authorized user.

The system is equipped with a variety of special features, such as:

- Document thickness detection
- Programmable jobs
- Automatic jobs
- flexFeed
- Double feed control
- Hopper swap
- Multifeed
- Daily mail
- intelliDeck
- powerFold.

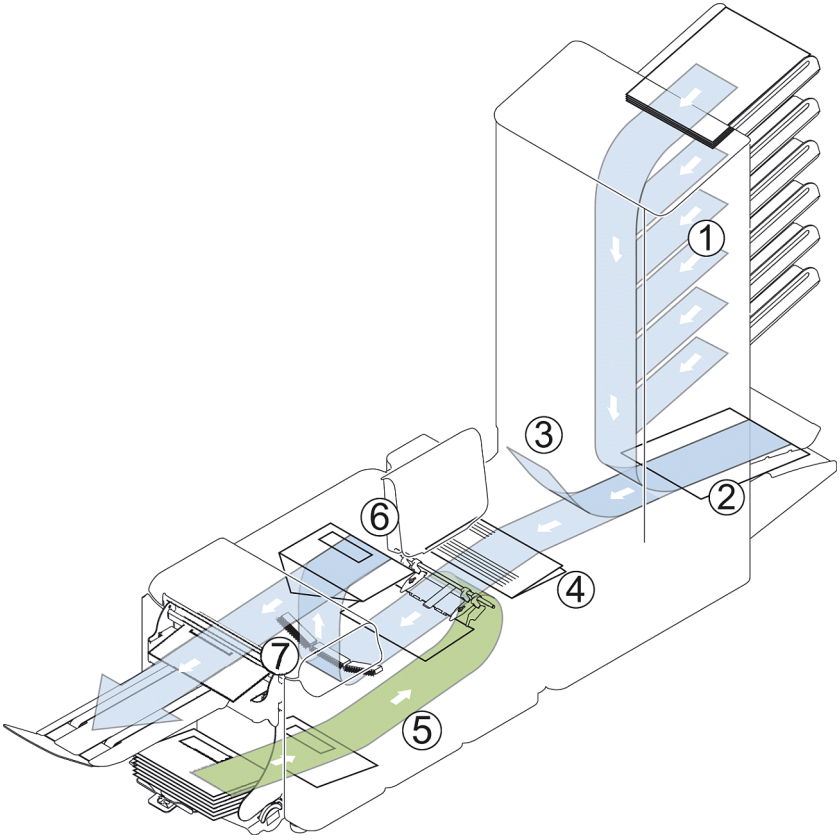

The figure shows an overview of the system.

Document Feeders (flexFeed) (1)

The flexFeed is the feeding part of the system. There are two types of feeders: the automatic and the special feeder. The automatic feeder does not require any adjustments for the separation. From a feeder you can feed one or more documents (multi feed). The feeders have a double feed control (DFC). DFC detects if more documents are fed instead of one.

You can link feeders. This means that two feeders can be linked as pairs. When the first feeder is empty, the system switches to the other feeder. Meanwhile the empty feeder can be refilled without stopping the system.

The upper automatic feeder is equipped with a 'daily mail' function. You can use this feeder to process sets of documents that you cannot process automatically (stapled documents and sets with varying thickness).

Collating Area (2)

All documents of a document set are collated and aligned in the collating area.

intelliDeck(3)

The intelliDeck automatically throws out incorrect sets of documents. In this way the system does not need to stop. Correct sets will be transported to the powerFold unit.

powerFold(4)

The fold unit folds the documents. The following fold types are possible (see Terminology on page 115):

- No fold
- V-fold
- C-fold
- Z-fold
- Double V-fold

Envelope feeder (5)

Envelopes that are placed on a stack by the user, are fed one by one into the system by the envelope feeder.

Inserter (6)

After the documents are folded, the documents are transported to the inserter. The inserter inserts the documents into a waiting envelope. The inserter seals the envelope or not, depending on the settings. Automatic monitoring ensures the correct number of inserts per envelope.

Stacker (7)

If you have a High Capacity Vertical Stacker installed on your system, the envelope is stacked in the stacker, when it leaves the system. The vertical stacker can store up to 325 filled envelopes. The vertical stacker can be equipped with Mail Piece Production Control (MPPC).

Operating Controls

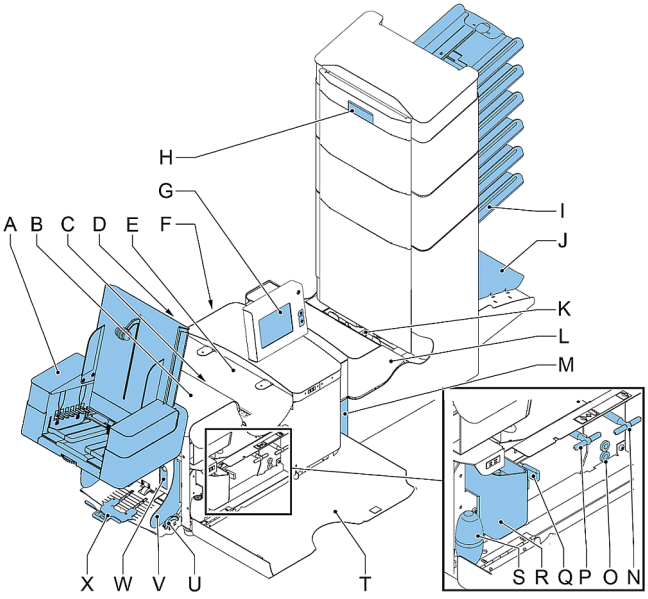

A - High Capacity Vertical Stacker

B - loc cover

C - unlocking lever for loc

D - power inlet, power switch

E - inserter cover

F - RS232 connector / USB / modem

G - display (operator panel)

H - hand grip vertical transport cover

I - document feed tray

J - collator arm

K - intelliDeck (divert)

L - powerFold

M - locking handle powerFold

N - handle for manual transport of the envelope

O - air plugs for cleaning the sensors

P - handle for manual transport of the mail set

Q - unlocking handles for rollers envelope track

R - sealing liquid reservoir

S - bellows for cleaning sensors

T - side cover (opened)

U - thumb wheel for side guide adjustment

V - side guides envelope feed tray

W - lever for envelope separation adjustment

X - envelopes support

Control Panel

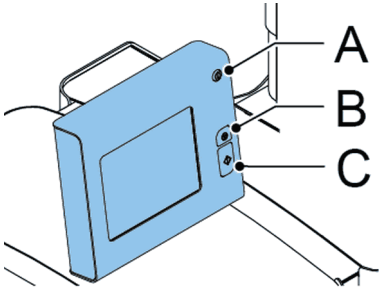

The control panel consists of the touch screen and the following buttons:

A: On/Off (): Switches the system on or off. If the system is not used for one hour, the system switches to the power save mode. Press the On/Off button to switch back to the user mode.

B: Stop (): The system completes the current mail set and stops, leaving the system empty and ready for a new set.

C: Start (): The system starts to process mail sets.



The display is covered with a thin pressure-sensitive layer. To avoid permanent damage of the display, do not use sharp objects to press on the display.

Installing the Document Feed Trays

Place the document feed trays in position:

1. Hold the document feeder slightly inclined as shown in the figure.

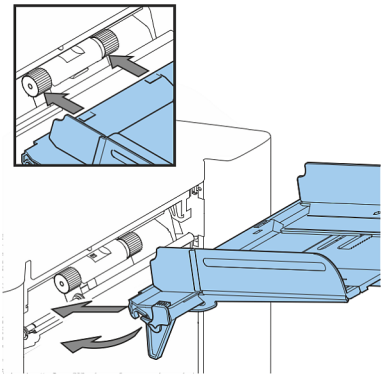

2. Place the front end of the document feed tray underneath the two black rollers.
3. Move the document feed tray upwards (lifting the black rollers), until it is possible to ‘hook’ the feeder into place.

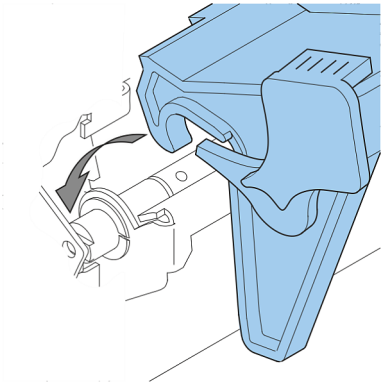

4. Move the document feed tray towards the machine and move the hooks over the mounting points (on both sides).
5. Let the document feed tray rest on the machine.

High Capacity Vertical Stacker

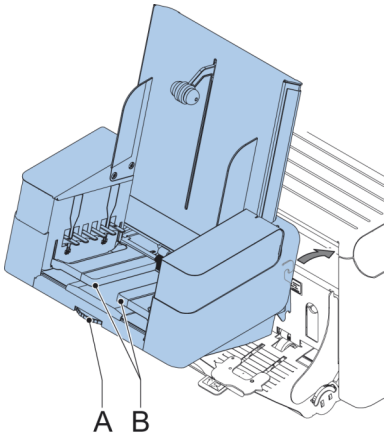

The High Capacity Vertical Stacker can be used to stack filled envelopes. The vertical stacker can store up to 325 filled envelopes. The vertical stacker can be equipped with Mail Piece Production Control (MPPC). In case you have a High Capacity Vertical Stacker, install it as follows on your system:

1. Move the stacker as indicated by the arrow.
2. Lift the stacker with the suspension hooks over the two rods (upper and lower) and lower it.
3. Connect the connector
4. Adjust the side guides with wheel **A** until a margin of 3 to 5 mm is left between the envelopes and the side guides.
5. For small envelopes it can be necessary to remove the extensions **B** from the envelope support.

Power Up

To start up the system:

> You can severely damage the machine if it is connected to the incorrect power supply. Before plugging in the machine, check if the local voltage is the same as the voltage mentioned on the type plate.

1. Connect the system to the mains power supply.
2. Use the power switch to switch the system on. The power switch is located on the back of the system.
3. Press the on/off button next to the display. (Only necessary when the system is in standby mode.)

The touch screen shows the home menu.



Home Menu



When you start up the system, the ‘home’ menu appears. With the arrows you can scroll through the jobs. If you want more information on a job, select the job.

If you just want to start without job definition, press **[New job]** and select **[Automatic]** (see Processing mail sets).

With the home button ( ) you get back to the home menu. The **[Menu]** button opens the advanced settings menu (see Opening the Advanced Settings on page 60).

Job Info

If you want more information on a job, select the job in the ‘home’ menu.

The ‘current job’ menu shows the following information of the selected job:

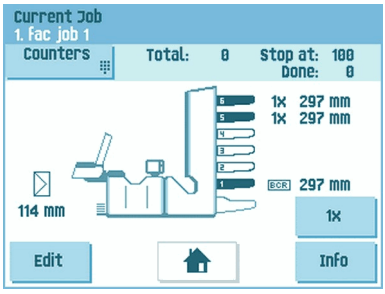

- Job number and Job name
- Total: total number of envelopes that have been processed using this job
- To do: number of envelopes to do. Only indicated if a ‘stop at’ value is set.
- Stop at: number of processed envelopes at which the system stops. You can set this number with the **[Counters]** button.
  You can set it between 0 (switched off) and 9999. The system will continue until the job counter reaches the stop counter value. The system stops and can be restarted. The stop counter is switched off when it is set to zero.

If you want to reset the daily job counter and the stop counter, press the **[Reset TOTAL Counter]** button in the ‘counters’ menu.

The counter settings are job related.

- A picture of the system with symbols for the selected features. The following symbols can be used:

	Shows the feeders selected to pick documents from (black is selected). Every selected feeder shows how many sheets will be fed from the feeder and the length of the sheets.
	This sign indicates that the relevant feeders are linked. This means that when one feeder is empty, the system automatically starts picking documents from the other feeder.
	This sign indicates that for the selected feeder OMR or BCR is switched on (optional).
	This sign indicates that the relevant feeder is set for daily mail.
	Gives information about the envelope size (ISO format or height in mm). An envelope with a cross means that no envelopes are used.
	Shows the type of fold, in this case C-fold.
	The sign indicates that for the relevant feeder the double feed detection is switched on.

- **[Edit]**: use this button to edit the job (see Editing a job on page 45).
- **[Info]**: if you press the **[Info]** button, the screen shows how to position the envelope and documents in the feeders. From this menu you can press a button to view the reading settings and insert'n Frank / insert'n Mail settings.

Side Guides

To adjust the side guides it is best to remove the document feed tray from the feeder as follows:

1. Push handle **A** downwards.

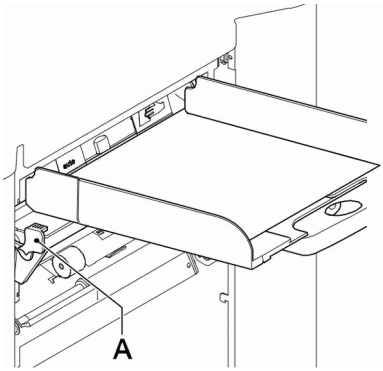

2. Lift the document feed tray upwards to unhook it and then pull it out from the feeder.
3. Loosen the knob **B** half a turn.

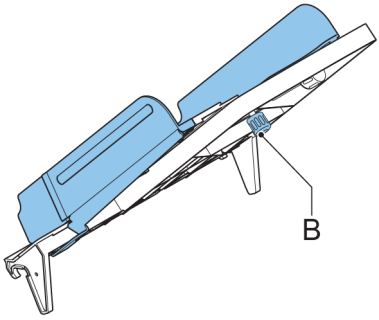

4. Grab the side guides in the middle and push them apart as far as possible.
5. Put a small stack of documents between the side guides.
6. Grab the side guides in the middle and push them towards the documents.The space between the side guides and the documents should be such that the documents have just enough play to move freely.
7. Re-tighten knob **B**.
8. Remove the stack of documents.
9. Replace the document feed tray (see Installing document feeders on page 11).

Document Orientation

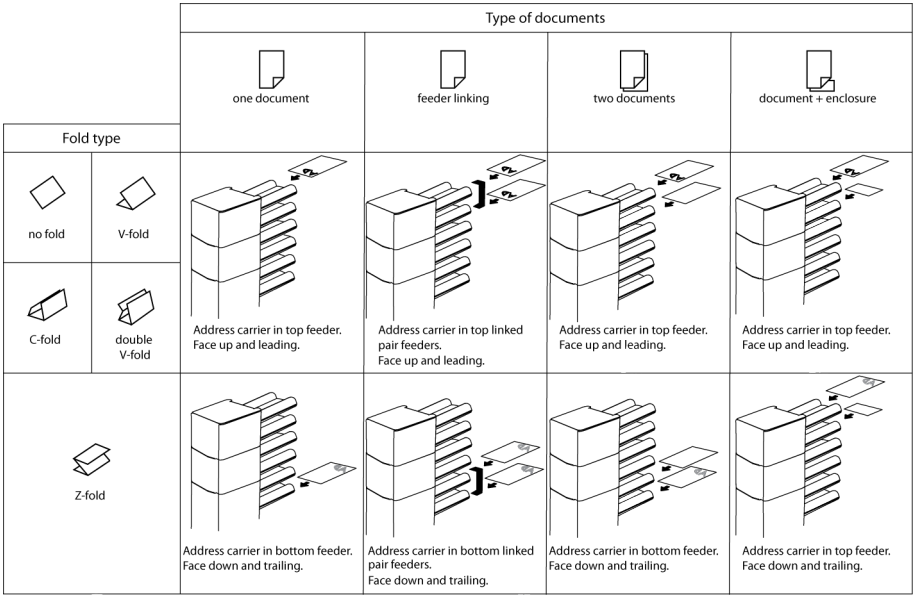

In case the optional extended powerFold is installed, the following feeding rules apply to documents with bottom address position:

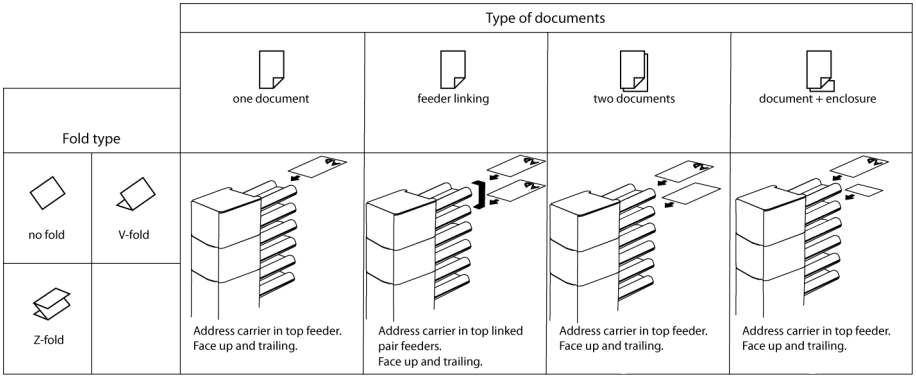

Filling the Document Feeder Tray

Fill the document feeder tray as follows:

1. Open the left-hand side guide **A** by turning it downwards.

   The feed rollers will automatically be lifted.

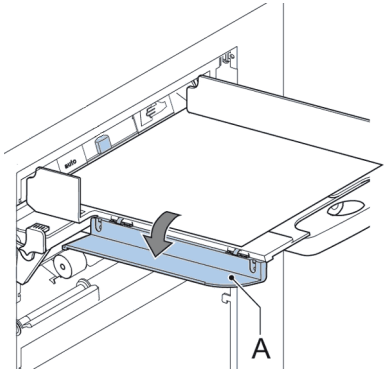

2. Place a stack of documents between the side guides.
3. Turn the left side guide upwards again.
4. Feed the documents (depending on the type of documents and the type of fold) (see Document Orientation).

Loading Envelopes

Before you load the envelopes, make sure the envelope separation and side guides are correctly set. Proceed as follows:

1. Rotate thumb wheel **D** to move the side guides **C** apart.

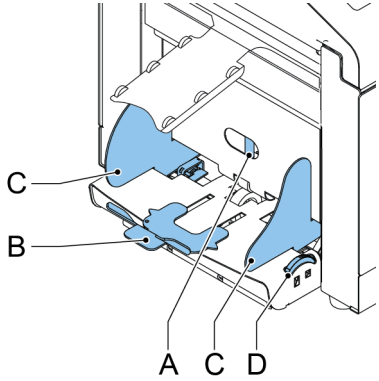

If the distance between the side guides is too large, the envelopes will twist sidewards, when transported into the machine.

2. Turn knob **A** counter-clockwise as far as possible.

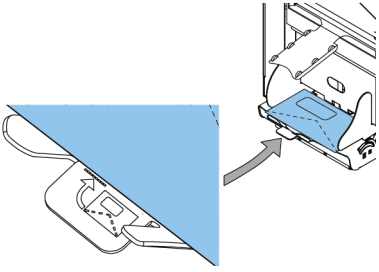

3. Slide an envelope (with closed flap) between the rollers in the machine and turn knob **A** clockwise until a slight resistance is felt when moving the envelope in and out of the machine.

4. When the resistance is too high, turn knob **A** counter-clockwise, until only a slight resistance is felt.

5. Place the bottom envelope between the rollers (flap down and trailing - bottom side of the envelope pointing to the machine).

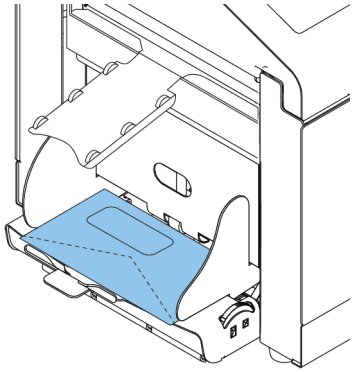

6. Loosen the stack of envelopes, and place the stack on top of the bottom envelope.
7. Shift envelope support **B** in or out, so that the flap side of the envelope is lifted approximately 20 mm (0.8”).
8. Turn envelope support **B** so the weight of the envelopes is evenly distributed on both sides.

Sealing Envelopes

Switch the envelope sealing on or off:

1. Lift the handgrip to open the top cover.

2. Shift the blue handle **A** towards



to disable the envelope sealing or towards



to enable the envelop sealing.

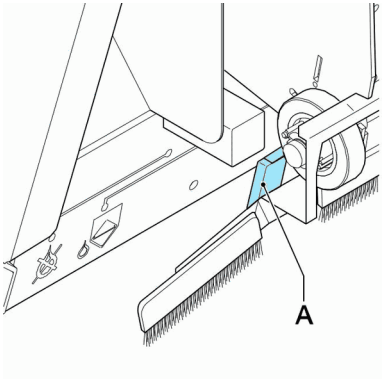

3. Close the top cover.

Before you start a job with sealing, wait approximately 5 minutes for the brushes to moisten or use moistened brushes. For instructions on the installation of brushes, see Clean and replace brushes on page 94.

Fill the Sealing Liquid Reservoir

1. Open the front cover **A**.

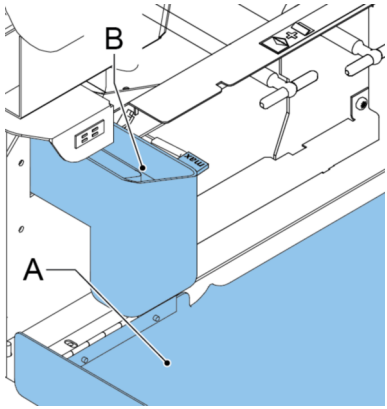

2. Fill the reservoir **B** to the "Max" lip with sealing liquid.
3. Close the front cover **A**.

Before starting the job, wait approximately 5 minutes for the brushes to moisten or use moistened brushes. For instructions on the installation of brushes, see Clean and replace brushes.

If the liquid reservoir is almost empty the touch screen shows a message to warn you that you should refill the reservoir.

Shut Down the System

1. Press the **[On/Off]** button to shut down the system.

When the system is busy, it completes and inserts the current set, stops and will be shut down.

3 Options

MaxiFeeder

The maxiFeeder is a feeder that can be loaded with a high number of documents. This feeder is intended to be used for Business Reply Envelopes (BRE), but also 'standard' documents up to 356 mm (14") length can be processed with it.

For more information on the operation of the maxiFeeder, refer to the topic on loading documents for the maxiFeeder on page 24.

Installing the MaxiFeeder

The maxiFeeder should be installed at the position of feeder no. 1 and/or 4. If you install the maxiFeeder on position 4, you cannot use position 2 and 3 for document feeders.

To install the maxiFeeder as follows:

1. Lift the paper feed rollers with the front edge of the maxiFeeder.
2. Move the maxiFeeder forward until it hooks behind the frame axle.
3. Connect the connector A to the socket B.

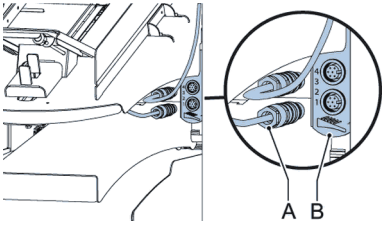

The maxiFeeder is auto-detected by the system when the system is switched on. This makes it easy to switch over from the standard document feeder tray to the maxiFeeder and vice versa.

To make use of a maxiFeeder it is not necessary to (re-)program the jobs.

To allow easier hooking on of the maxiFeeder it is advised to put the feeding plate in the rear position.

Adjust the maxiFeeder Side Guides

Adjust the side guides:

1. Take a stack of documents/BREs and place them in the feeder tray.
BREs with flap down and leading (top side pointing to system).

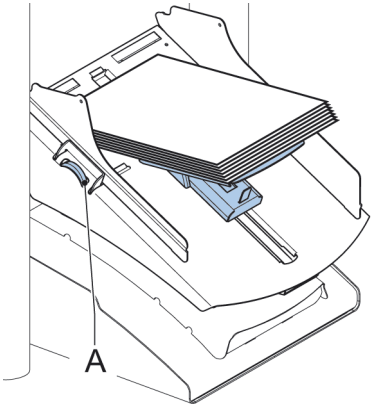

2. Adjust the side guides by turning the thumb wheel **A** such that the documents/BREs just fit and can move without resistance.
Too much play causes skewing.

Adjust the maxiFeeder Document Separation

When the maxiFeeder is used at an automatic separation feeder, the separation is set automatically.
The maxiFeeder can also be used on a feeder position with a manually adjusted separation.
To adjust, proceed as follows:

1. Remove the document feeder trays 2 and 3.

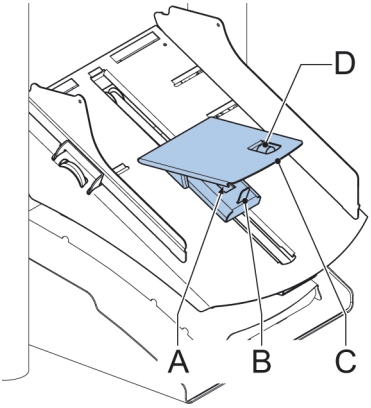

The lowest feeder is feeder 1.

2. Squeeze the two blue handles **A** and **B** and shift the feeding plate **C** as far as possible to the front.
3. Push knob **D** forward until it clicks.
4. Place a document/BRE on the feeder tray and slide it in the system till the leading edge is not visible anymore. Turn knob **D** counterclockwise if the separation is set to narrow.
5. Push the document/BRE between the rollers.
6. Turn knob **D** clockwise to get more resistance and counterclockwise if the separation is set to narrow.
   The separation is adjusted correctly when a slight resistance is felt on the document/BRE.
7. Pull knob **D** back when ready.
8. Replace the document feeder trays 2 and 3.

Feeding documents (MaxiFeeder)

To feed documents:

When filling the maxiFeeder, make sure that the document/BREs are positioned parallel in relation to the feed plate to ensure correct feeding.

The feeding plate assembly will be shifted up automatically (when the system starts processing) until documents/BREs are underneath the rubber paper pullers.

1. Squeeze the two blue handles **A** and **B**.

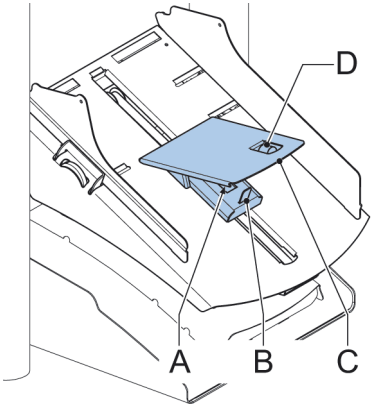

2. Shift the feeding plate **C** to the rear position.
3. Loosen the stack of documents and place them in the feeder.
   BREs with flap down and leading (top side pointing to system).

High Capacity Document Feeder (HCDF)

The High Capacity Document Feeder (HCDF) is an option that can be delivered from factory, or added to a 2 or 4 station version by a service engineer. The High Capacity Document Feeder has a capacity for up to 725 sheets. The normal document feeder tray has a capacity of 325 sheets.

For more information on the operation of the HCDF, refer to the topic on loading documents for the HCDF.

Installing the HCDF

To install the feeder tray of the HCDF:

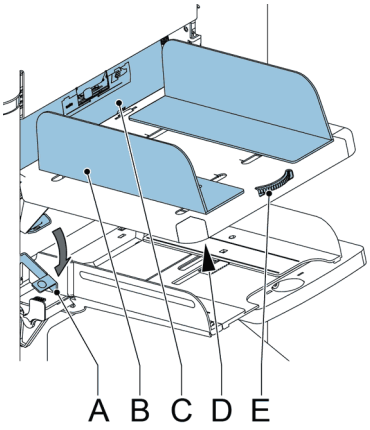

1. Pull down lever **A**.
2. Hook in the feeder tray.
3. Release lever **A**.

Adjusting the HCDF Side Guides

To adjust the side guides **B**:

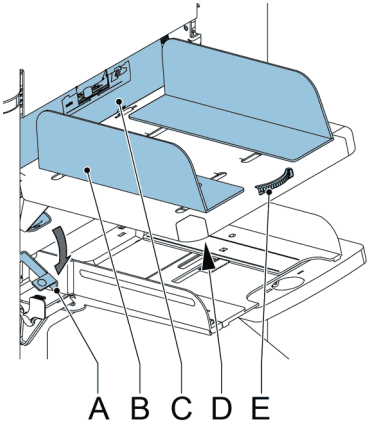

1. Loosen the knob **D** half a turn.
2. Put a small stack of documents between the side guides.

3. Rotate wheel **E**.
   The space between the side guides and the documents should be such that the documents have just enough play to move freely.
4. Re-tighten knob **D**.

Document Separation for the HCDF

The document separation is set automatically. There are no manual adjustments needed.

Feeding documents (HCDF)

To fill the document feeder tray:

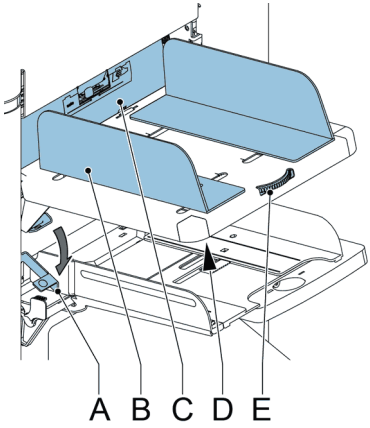

1. Pull down lever **A**.
   The feeder rollers **C** move up to filling level.
2. Place a stack of documents between the side guides (max. 725 sheets, 80 g/m²).
   Feed the documents (depending on the type of documents and the type of fold) (see Document Orientation on page 17).
3. Release lever **A**.

Conveyor Stacker

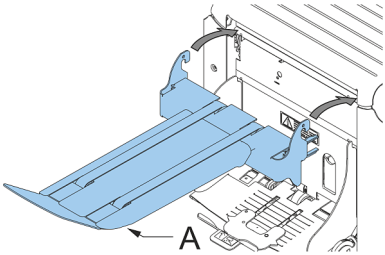

In case you have a conveyor stacker, install it as follows on your system:

1. Position the fork in a forward direction.
2. Move the conveyor as indicated by the arrows.
3. Lift the conveyor with the suspension hooks over the two rods (upper and lower) and lower it.

   Ensure that the fork hooks onto the eccentric.
4. Loosen finger knob **A** (located below the envelope support) and carefully rotate the envelope support until it is fitted correctly.
5. Fasten the finger knob.
6. Connect the connector.

Side Exit

The system can be equipped with a side exit and catch tray. The side exit can be fitted instead of the standard envelope receiving tray. The side exit allows a conveyor or a franking system to be fitted in line with the system.
The side exit can also be used with a catch tray to achieve vertical stacking. The catch tray is delivered with the side exit.

insert'n Frank / insert'n Mail

If this system is connected to a mailing/franking system, insert'n Frank / insert'n Mail allows you to:

- Switch automatic mailing/franking on or off
- Remotely select a mailing/franking job
- Set the printing/franking value (option)
- Automatically set the printing/franking value using the inserter data

For programming this option, see Mailing and Franking settings on page 57. Refer to the appendix for an extensive description of the mailing (franking) option.

Mail Piece Production Control

The document system can be equipped with Mail Piece Production Control. This option enables the system to verify the inserted documents or sets of documents with a database, which is generated when printing the documents. The system will give a warning when a mail piece is missing at the exit of the inserter.

Refer to the appendix “Mail Piece Production Control” for an extensive description of this option.

4 Processing Mail Sets

Introduction

With the system you can process mail sets in the following ways:

- **Automatic job**: The system automatically picks one sheet from each filled feeder and processes them into mail sets.
  The automatic feature is described in this chapter.
- **Manual job**: various settings, not available in an Automatic job, can be stored for re-use in user-programmable jobs (Manual jobs). This includes the use of daily mail. Working with manual jobs is described in What is a job on page 40.

Automatic job processes mail sets according to the following rules:

- The machine picks one sheet from each filled feeder;
- The picked documents will be folded (if necessary) and inserted into an envelope;
- Only the feeders that feed successfully will be selected;
- Only the Double Feed Control (DFC) of the upper feeder will be selected (this is done automatically).

The following features are not supported with Automatic job processing:

- Linked feeders (the option where, if one feeder is empty, the system automatically continues using another feeder);
- Multifeed (picking more than one sheet from a certain feeder);
- Daily mail (see Processing Daily Mail on page 36);
- Reading functionality (see Reading Introduction on page 71);
- No envelope mode (see Envelope settings on page 49);
- Envelopes with open flap (see Envelope settings on page 49).

If you want to use any of these features, you have to use Manual jobs to process the mail set (see What is a job on page 40).

Processing a Basic Mail Set

A basic mail set consists of documents from one or more document feeders. This set is inserted into an envelope.

Before you start, make sure you have read the Introduction on processing mail sets on page 31.

1. From the home menu, press the **[New job]** button.
2. Choose **[Automatic]** to start an Automatic job.
3. Load the documents and envelopes into the feeders.

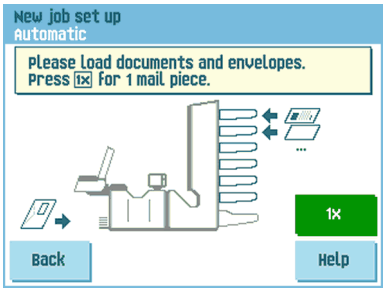

4. Press the **[1x]** test run button to create one mail set and follow the instructions on screen.

> After a successful test run, it is possible to use the **[Save]** button to save the settings of the Automatic job to a new job.

5. Press the **[start]** button to start the mail set production.

The system stops producing mail sets when one of the feeders is empty or the **[stop]** button is pressed.

Processing a Mail Set with BRE or Inserts

A mail set with BRE consists of documents from one or more document feeders and an insert/BRE from the BRE feeder. This set is inserted into an envelope.

Before you start, make sure you have read the Introduction on processing mail sets on page 31.

Load the BREs with the flap down (flap leading).

1. From the home menu, press the **[New job]** button.
2. Choose **[Automatic]** to start an Automatic job.
3. Load the documents, BREs or inserts and envelopes into the feeders.

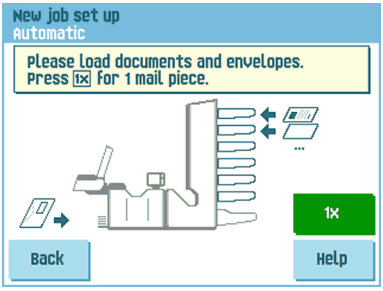

4. Press the **[1X]** test run button to create one mail set and follow the instructions on screen.
5. Press the **[start]** button to start the mail set production.

The system stops producing mail sets when one of the feeders is empty or the **[stop]** button is pressed.

Document Separation

The term ‘Document separation’ refers to the adjustment required for separating the upper document from the rest of the documents in the stack. This prevents pulling too much documents from the stack at the same time.

The document separation for the automatic feeders is set automatically; there are no manual adjustments needed.

Feeders 1 and 2 (the feeders in the two lowest positions) can be special feeders. The document separation for special feeders must be adjusted manually. While special feeder trays fit in all positions, adjusting the separation is only possible when they are fitted on position 1 and 2.

Adjust the separation of special feeders as follows:

Adjusting the separation (using a special feeder) is especially important when you want to process glossy materials.

1. Push the knob **A** forward until it clicks.

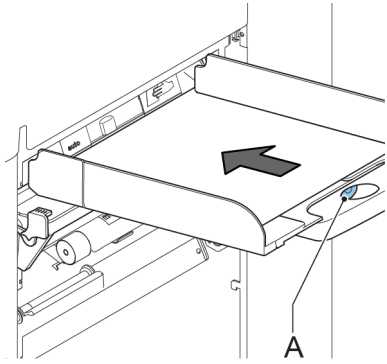

2. Place a document on the feed tray and slide it about 60 mm (2.4 inch) into the system (turn the knob **A** counter clockwise if the separation is set too narrow).

3. Push the document between the separation rollers, which are behind the rubber paper pullers.

4. Turn the knob **A** clockwise to get more resistance or counter clockwise to lower the resistance.
The separation is adjusted correctly when a slight resistance is felt on the document.

5. Pull the knob **A** back again when ready.

Adjustment of the Document Stoppers

The document stoppers mark the position at which the documents coming from the feeder turn towards the folding area. The position of the document stoppers is automatically determined by the system during the job programming.

Initially the document stoppers are adjusted for position B. In this position a wide variety of documents can be handled (max. 297 mm; 11.7 inch) and adjustment is not needed.

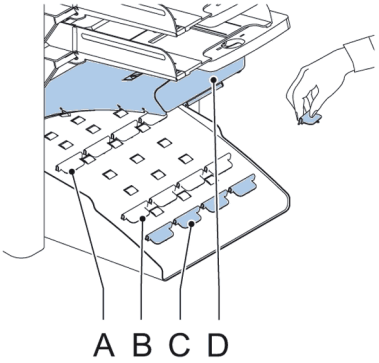

When a job is selected in which a different stopper position has been programmed, the operator has to put the document stoppers in the correct position as indicated by the display.

To adjust the stopper position:

1. Lift and hold the collator arm **D**.
2. Squeeze the stopper and pull the front side tab up.
3. Place the flat back tab into the correct slotted hole.
4. Push the stopper into position.

Stop position **A** can handle documents up to 148 mm (5.8 inch), stop position **B** can handle documents up to 297 mm (11.7 inch) and stop position **C** can handle documents up to 356 mm (14 inch).

Processing Daily Mail

The daily mail function is only available when reading is not activated. When daily mail is set, the links to the daily mail feeder will be deselected automatically.

When the daily mail function is selected DFC is not available.

To process documents or sets of documents, which can not be processed automatically (e.g. stapled documents), the top feeder is equipped with a daily mail switch.

To use the Daily Mail function:

1. Select a job where the daily mail function is selected. You can recognize the daily mail by the icon in the job information menus.

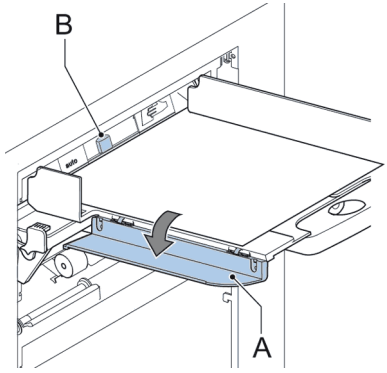

2. Turn down the left side guide **A** of the upper tray. Now you can see the Daily Mail handle **B**.
3. Move the handle to the right to enable the Daily Mail function.
4. Turn side guide **A** upwards.
5. Press the **[start]** button to start the job.
6. Place the document or document set in the feeder (see Filling the Document Feeder Tray on page 18).

   The document or document set will be folded and inserted into the envelope as described in the selected job.
7. Place the next document or document set in the feeder. The system will keep running to process the inserted document or document set.

8. When finished with Daily Mail, press the **[stop]** button to stop the job.
9. Set the Daily Mail handle **B** to the 'AUTO' position to disable the Daily Mail and enable the automatic document separation.

Test Run

Before starting an Automatic job, it is possible to perform a single test run.
This test run is intended to validate the settings of the Inserting System:

- Inspect and adjust the stop position of the envelope.
- Check the fold settings for one set.
- Check if the address is correctly positioned behind the envelope window.

Adjusting the Address Position

If the address on your mail is not correctly positioned behind the envelope window, change the address position as follows:

> Adjusting the address position is only possible after running a test run (by using the **[1x]** button).

1. Choose a job and press the **[1x]** button.

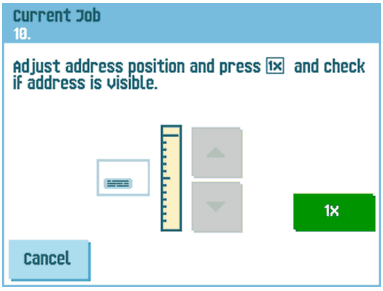

2. Press **No** if asked if the mail set is correct.
3. Press **Yes** if asked if the documents are inserted correctly.
4. Press **No** if asked if the address is readable.
5. Follow the steps in the wizard.

Adjusting the Envelope Insert Fingers

To make a good insert of the document set into the envelope, the insert fingers **A** should be about 5 mm (0.2 inch) inside the envelope.

The outer fingers should be about 5 to 10 mm (0.2 to 0.4 inch) from the edges of the envelope.

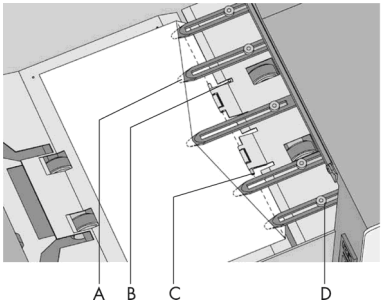

To verify that the position of the fingers is correct:

1. Choose a job and press the **[1x]** button.
2. Follow the steps in the wizard.

To adjust the envelope insert fingers:

1. Loosen the knurled knob **D** on top of each finger.
2. Adjust each finger so that the tip enters about 5 mm (0.2 inch) into the envelope.
3. Re-tighten the knurled knob.The fingers can be moved sideways to the desired position.
4. Place the outer fingers about 5 to 10 mm (0.2 to 0.4 inch) from the edges of the envelope.

When adjusting the fingers sideways, make sure that finger **A** is not positioned over sensor **B**.

Check the position of the insert fingers when changing to a different type of envelope.

Verifying the Insert Position

To make a good insert of the document set into the envelope, the envelope should be positioned correctly.

The document set is inserted correctly if the flap folding line of the envelope is positioned underneath the green roller **C**.

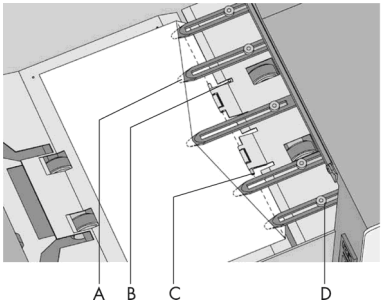

To verify the insert position:



This adjustment must only be checked in case of problems or when changing the envelope type.

1. Choose a job and press the **[1x]** button.
2. Lift the locking lever of the loc and pull the loc into the vertical position.
3. Press **No** until the question about envelope position appears.

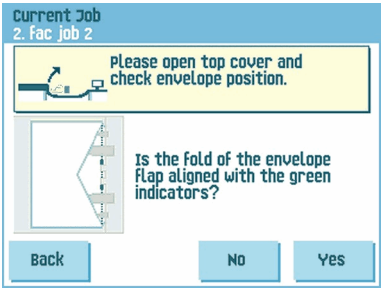

4. Press **No** again and follow the instructions on screen.

5 Working with Jobs

What is a job

If you have to process a lot of mail sets of the same type (for example bills), you can save the settings to a 'job'. The next time you just select the job and immediately start without defining any settings.

The following settings are saved in a job:

- Envelope type/size;
- Which document feeders should be used, how many documents should be fed from each feeder and document height for each feeder;
- Feeder linking on/off;
- If BREs or insert cards should be included;
- Address position;
- Fold settings;
- Double feed control settings;
- Reading settings (option);
- Mailing and Franking settings (option);
- Mail Piece Production Control settings (option);
- Batch Counter, defining the number of mail sets that the job must process. The job will automatically stop processing when this number is reached.

Creating a new job

To create a new job:

1. From the home menu, press the **[New job]** button.

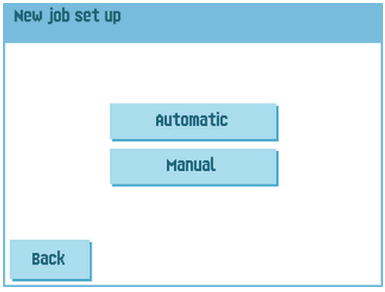

2. Press **[Manual]** to create a new job.
For **[Automatic]**, see Processing a basic mail set on page 32.

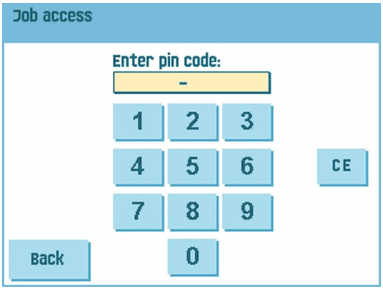

3. Enter the pin code **2546**.

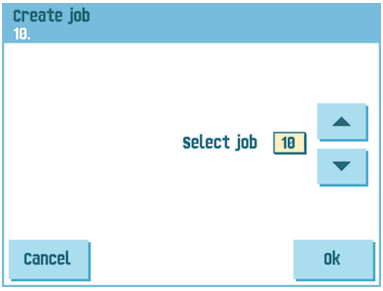

4. Press **[OK]** to confirm the selected free job number.

A new selected job number starts with default settings.

The job settings menu opens. The meaning of all buttons and settings is explained in Job settings on page 48.

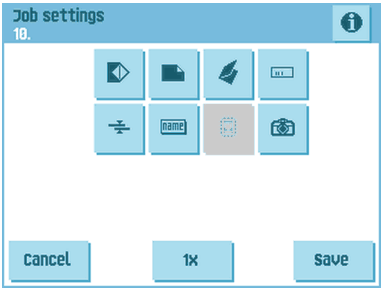

5. Press **[Save]** to save the job with the entered settings under the specified job number and name.
   To name a job, see Job name settings on page 57.
6. Press the **[1x]** button to verify that the insert position and address position are correct (see Verifying the Insert Position on page 39 and Adjusting the address position on page 37).

Performing a test run

Before starting a job, it is possible to perform a single test run with the settings of the current job.

To perform a test run:

1. In the home menu, use the arrows to scroll through the Job selection list.

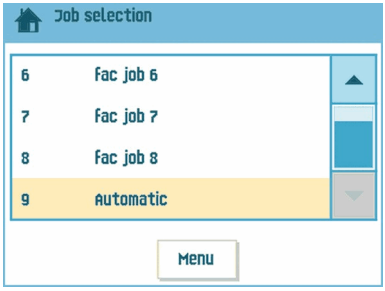

2. Select the job you want to use.

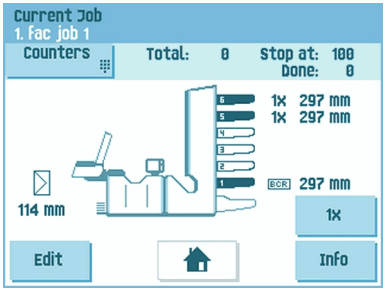

3. Click the **[1x]** button.

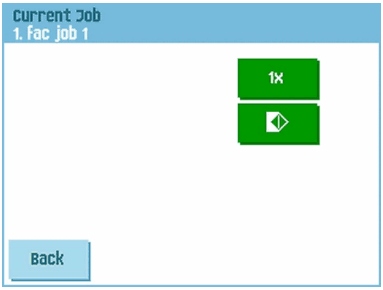

4. Press the  button if you want to adjust the envelope position before running the test run (see Adjusting the Envelope Position on page 43).
5. Press the **[1x]** button to perform the test run.

Adjusting the Envelope Position

Before performing a test run, it is possible to adjust the envelope position.

To adjust the envelope position:

1. Press the  button to start adjusting the envelope position.

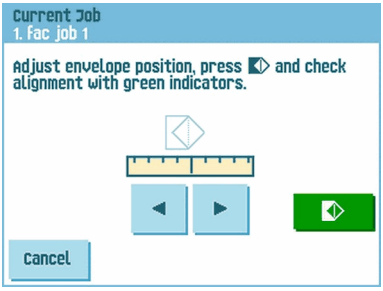

2. Use the arrows beneath the ruler to adjust the envelope position.

3. Press the  to check the new alignment.

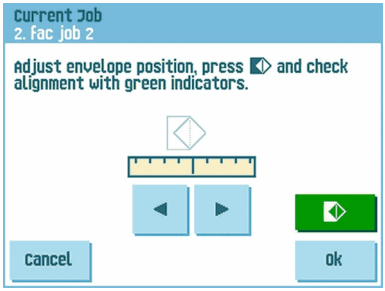

4. Press the **[OK]** button to accept the new alignment.

Using a job

If you want to use an existing job:

1. From the home menu, select the job you want to use.

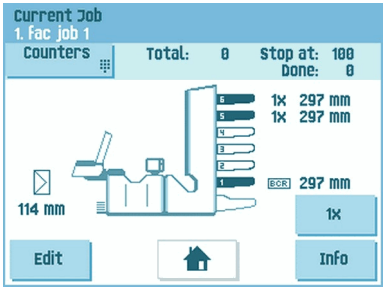

2. If you want to perform a test run:
   Press the **[1x]** button to do a test run.
3. If you want to change the counter for this job:
   Press the **[Counters]** button to make changes to the amount of mail sets that the job produces.
4. Press the **[Start]** button to start the job.

Editing a job

To edit an existing job:

1. From the home menu, select a job you want to edit.

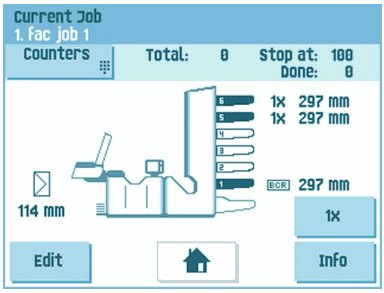

2. Press the **[Edit]** button.
3. Enter the pin code **2546**.

   The job settings menu opens. See Job settings on page 48 for the meaning of all buttons and settings.

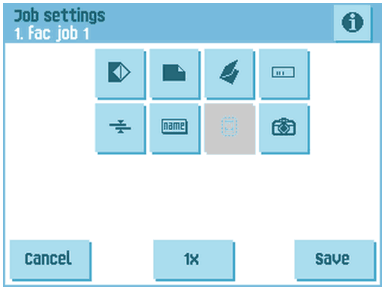

4. Press **[Save]** to save the job with the entered settings under the specified job number and name.
5. Press the **[1x]** button to verify that the insert position and address position are correct (see Verifying the Insert Position on page 39 and Adjusting the address position on page 37).

Copying a job

To copy existing job settings to a new job:

1. Press the **[Supervisor]** menu button from the main menu.
2. Enter the pin code **2546**.

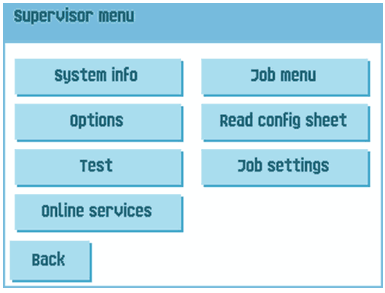

3. Press the **[Job]** menu button.
   The job menu opens.

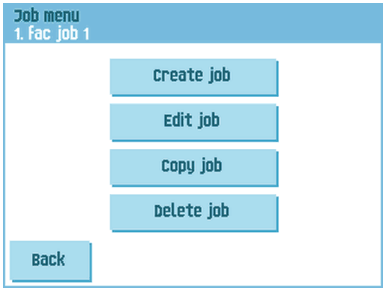

4. Press the **[Copy job]** button.
   The copy job menu appears.

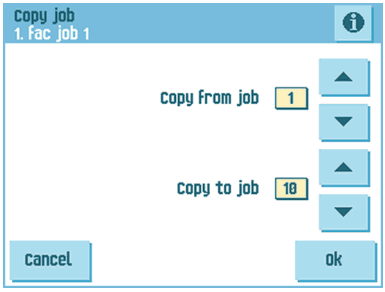

5. Press the arrows if you want to select another job number to copy from or to copy to.

> You can only copy job settings to new jobs.

6. Press the button for details of the job to copy from.
7. Press **[OK]** to copy the job settings.

   If all jobs are programmed the touch screen shows “No more free jobs”.

   It is possible to copy an Automatic job into a job. Before an Automatic job can be copied, it has to be defined successfully (see Processing a basic mail set).

Deleting a job

To delete an existing job:

1. Press the **[Supervisor menu]** button from the main menu.
2. Enter the pin code **2546**.

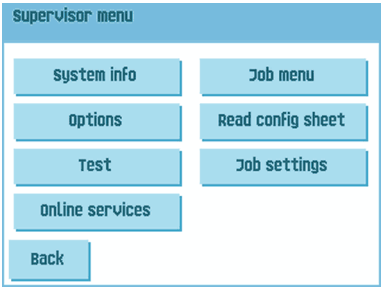

3. Press the **[Job menu]** button.
   The job menu opens.



4. Press the **[Delete job]** button.
The delete job menu appears.

When you press [**OK**], the job is deleted without a warning.

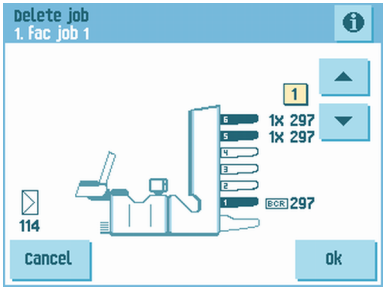

5. Select a job number and press **[OK]**.

Job settings

From the job settings menu the following settings are available:

- Envelope settings (see Envelope settings on page 49);
- Document settings (see Document settings on page 50);
- Fold settings (see Fold settings on page 52);
- Reading settings (if installed, see Reading settings on page 54);
- Double feed control settings (see Double feed control settings on page 56);
- Job name settings (see Job name settings on page 57);
- Mailing/Franking settings (if installed) (see Mailing and Franking settings on page 57);
- Mail Piece Production Control (MPPC) settings (if installed) See the appendix operator manual Mail Piece Production Control.

If you want to view the job details of the current job, press the button. If you want to run a test, press the [**1x**] button.

Envelope settings

In the ‘envelope settings’ menu you can define the envelope properties and switch the sealing on and off.

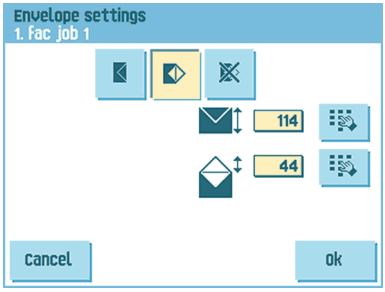

In the top of the screen, three selection buttons are displayed, from which one can be selected. The selected settings button will be highlighted.

- Press the button to select an envelope with closed flap. This means that the envelopes are fed with closed flap.

  Use the button to enter the applicable dimensions. It is also possible to select ISO standard envelopes or dimensions in inches (depends on the installation settings). The envelope height can be set between 90 mm (3.5 inch) and 162 mm (6.38 inch).

- Press the button to select an envelope with open flap. This means that envelopes are fed with open flap. Use the upper button to enter the applicable dimensions. The envelope height can be set between 90 mm (3.5 inch) and 162 mm (6.38 inch). It is also possible to select ISO standard envelopes or dimensions in inches (depends on the installation settings). Use the second button to enter the flap height. The flap height can be set between 32 mm and the envelope height minus 32 mm (1.26 inch).

- Press the button to define a job without inserting the documents in envelopes (no envelope mode). This can be useful for jobs, where documents only have to be sorted and/or folded.

Document settings

In the ‘document settings’ menu you define the document formats and the number of documents that must be picked from the different feeders.

- 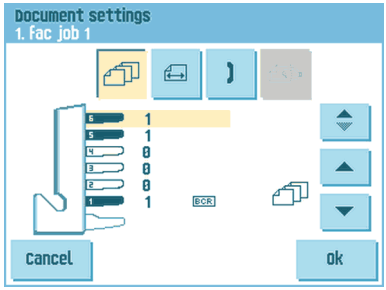

- Press the  button to set the number of sheets for the different feeders.
- Press the  button to select a feeder. The selected feeder is highlighted.
- You can feed more than one document for your document set from each feeder. This is called Multi Feed. Press the arrows to change the number of sheets that must be picked from the highlighted feeder. When the number of documents is 0, the selected feeder will be deselected.

When a feeder is set to daily mail the number of documents is always 1 and can not be set in this menu.

The maximum number of sheets in a set is 25. When folding is used the maximum set thickness is 8 sheets in letter fold and 10 sheets (80 gr./m2) in single fold.

- Press the  button to enter the document height. The height or the ISO format of the document will be displayed next to the relevant feeder.
- 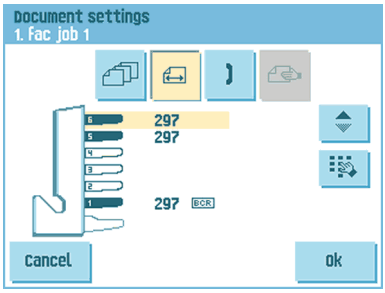

- Press the  button to select a feeder. The selected feeder is highlighted.
- Press the  button to show a numeric keypad to enter the exact dimension of the document. Dimensions can be entered in mm, inches or as standard ISO paper dimensions (depending on installation settings). The system will not allow entering dimensions out of technical ranges. The document size can be set between 90 mm (3.54 inch) and 356 mm (14 inch). The default document size setting of a new job is 297 mm (11.7 inch).
- Press the  button to link two feeders. This function enables to fill two adjacent feeders with the same documents. When the first feeder is empty, the system automatically swaps to the other feeder.
- 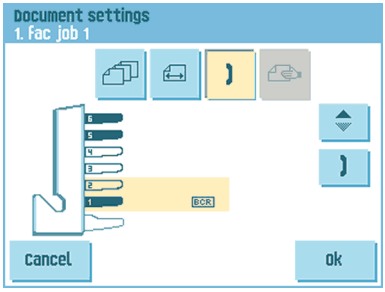

- Press the  button to select two adjacent feeders. The selected feeders will be highlighted.
- Press the  button to link two highlighted feeders. The link-symbol will be displayed between the selected feeders.



When linking two feeders, the program will automatically apply the number and format of the documents of the lowest feeder to the other feeder.

When a feeder is selected for reading, the feeder below can not be linked to this reading feeder. The reading feeder can be linked to a feeder above when it is not selected for selective feeding.

- Press the button to enter the setting of the daily mail function. This function enables to process documents or sets of documents, which can not be processed automatically (see Processing Daily Mail on page 36). The upper feeder is automatically selected.
- Press the button to enable the daily mail function. The icon appears behind the upper feeder. If you press the button again the daily mail function will be disabled.

The daily mail function is only available when reading is not activated. When daily mail is set, the links to the daily mail feeder will be deselected automatically.

When the daily mail function is selected DFC is not available.

Fold settings

In the fold settings menu you can adjust the folding dimensions and folding type.

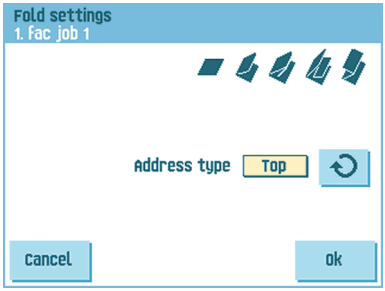

Select the Address type. In case the system is equipped with the optional bottom address application you can switch between Top and Bottom address position.

Select the fold type. The following choices are available for top address:

- No fold (no settings required)
- V-fold
- C-fold
- Double V-fold
- Z-fold

For Bottom address only three fold types are possible.

Except when no fold is required, the touch screen shows a simple diagram of the document with the fold positions.

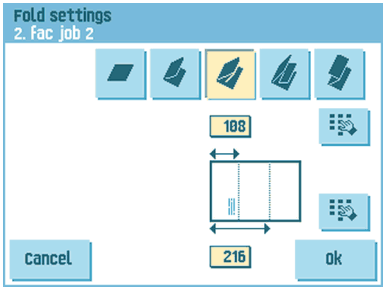

To change the fold positions press the button next to a fold. Enter the required position of the relevant fold.

The touch screen will indicate when entered positions are out of range.

Reading settings (option)

For a full function description of reading, see Reading Introduction on page 71. In the ‘reading settings’ menu it is possible to enable or disable the Optical Mark Recognition (OMR) or Barcode Reading (BCR) function and to adjust the basic settings. The first ‘reading settings’ menu covers the following settings:

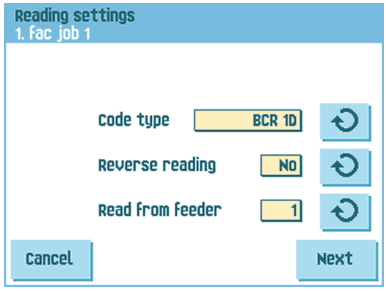

- Code type: default is the setting ‘none’: reading is disabled.

  Change the setting with the button. The following codes are possible:
  - 1-track OMR
  - BCR for reading barcodes
  - Flex 1-9 for reading customer specific codes (only if flex dongle is installed)
- Reverse reading: press the button to set reverse reading on or off (see Reverse reading on page 72).
- Read from feeder: press the button to select a feeder to activate reading on.

By pressing the **[Next]** button the next reading settings menu appears.

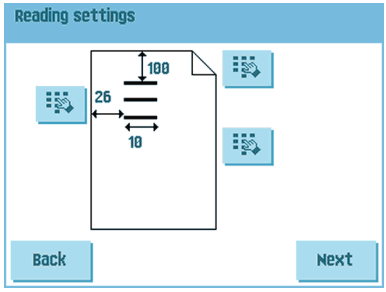

In this menu you can define the location and the width of the OMR code. The position from top should be between 15 mm (0.6 inch) and the document length minus 20 mm (0.8 inch). If you press [**Next**], you can load an OMR sheet to verify the OMR settings. The system processes the OMR sheet and shows the read marks. The information button shows the interpretation of the marks.

If you selected BCR, you can update your barcode definition with a configuration sheet or load a sample BCR sheet to learn the BCR location. The system processes the BCR sheet and shows the read code. The information button shows the interpretation of the code.

By pressing the **[Next]** button the next reading settings menu appears.

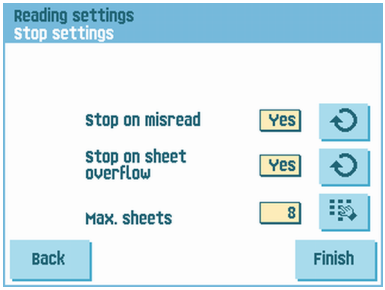

- Stop on misread: define if the system should stop or not when a code is misread. In case of “yes”, the system stops after a misread. The incorrect set is diverted. After resetting the system, the final part of the set is also diverted and the system starts processing again. The diverted set should be checked by the operator.
  When “stop on misread” is set to “no”, the system does not stop after a misread. The incorrect set is diverted. The final part of the set is also diverted and then the system starts processing again. After 5 misreads in a row, the system stops and an error code is generated.
- Stop on sheet overflow: define if the system should stop or not when a set exceeds the maximum number of sheets, as defined at the "Max. sheets setting". In case of “yes”, the system stops when the number is exceeded. The incorrect set is diverted. After resetting the system, the final part of the set is also diverted and the system starts processing again. The diverted set should be checked by the operator.
  When “stop on sheet overflow” is set to “no”, the system does not stop when a set exceeds the maximum number of sheets. The incorrect set is diverted. The final part of the set is also diverted and then the system starts processing again.
- Max. sheets: use the arrow buttons to select the maximum amount of sheets in the set of documents.

The maximum number of sheets in a set is 25. When the number of sheets exceeds 8 or 10, depending on the fold, the document can not be folded anymore. In this case, the maximum length of sheets is 148 mm for a C5/6 envelope. Also make sure that the fold is set to No fold. Ignoring this will certainly lead to stoppages. When the maximum number of sheets exceeds the programmed maximum number of sheets in a set, the system stops and error VS:110 will be displayed. After removing the set and pressing the **[Reset]** button, the system will start and repeat the process until an insert or divert mark is encountered, error VS:135 (final set part) will be displayed.

Double feed control settings

In the ‘DFC settings’ menu you can set Double Feed Control (DFC) for the different feeders on or off.

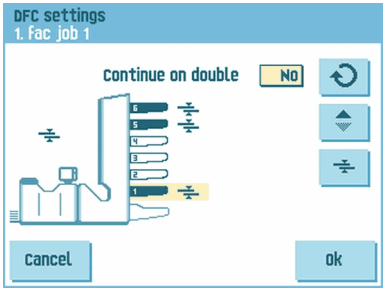

- Press the  button to select a feeder.
- Press the  button to switch the DFC on or off.
  When switched on, the icon is displayed. When a job is started, the first document taken per feeder is used for a reference measurement.
  When a document is exceeding that reference thickness an error will be displayed.
- Press the  button to set Continue on double on or off. If Continue on double is on (“yes”), the machine will not stop if two sheets are feeded instead of one. The document-set containing the double sheets will be diverted.



When Daily mail is selected, the DFC of the upper (Daily mail) feeder is switched off automatically.

Job name

It is possible to store the job with a meaningful job name, to easily recognize the job. This name is displayed at job selection. Enter a job name with the alpha-numeric keypad.

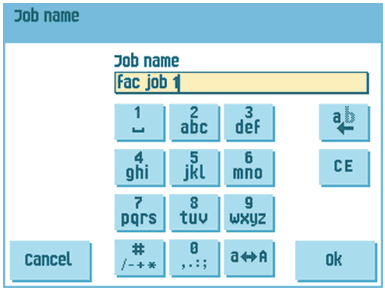

- Use the  button to clear a character left of the cursor position (backspace).
- Use the **[CE]** button to clear all entered characters and start again.

Mailing/Franking settings (option)

If this machine is connected to a mailing/franking machine, this option allows you to select the franking mode.

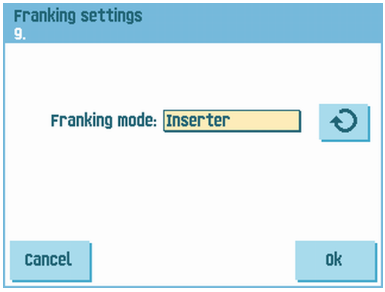

Use the  button to choose between:

- Pass through: franking off
- Franking: the mailing (franking) system will print/frank the envelopes according to the local mailing (franking) system settings. When you press the [**Ok**] button, you can choose a franking job from the franking machine.
- Inserter: the mailing (franking) system will print/frank the envelopes according to the size data communicated by the inserter. When you press the [**Ok**] button, you can enter the weight of single documents and envelopes and the envelope width.
  To link a mailing (franking) job to the inserter job, use the arrow buttons to select a job. If no link is required, select 'Current job'.

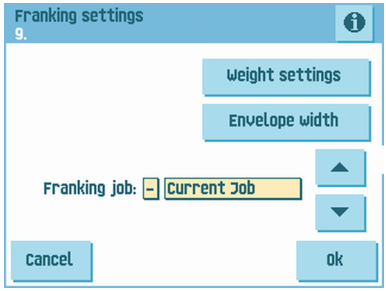

Refer to the appendix for an extensive description of the mailing (franking) option.

Mail Piece Production Control settings (option)

For Mail Piece Production Control settings, see the appendix operator manual Mail Piece Production Control.

6 Advanced Settings

What are Advanced Setting?

Advanced Settings are all settings that can be found under the Display Settings Menu and the Supervisor Menu.

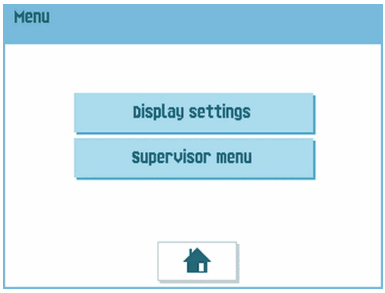

The Display Settings menu contains the following settings:

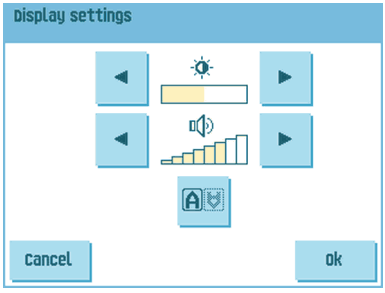

- Set screen brightness (see Changing the Display Settings on page 61);
- Set interface volume (see Changing the Display Settings on page 61);
- Change screen orientation (see Changing the Display Settings on page 61).

The Supervisor Menu contains the following settings:

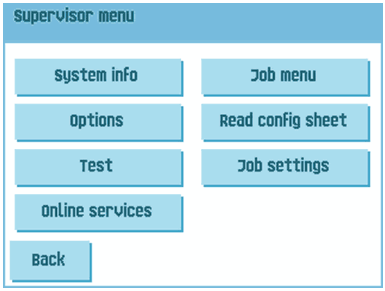

- System info (see Viewing System info and Software versions);
- Options (see Activating an option on page 64);
- Test (see Test menu on page 64);
- Online Services (see Start-up Online Services on page 84);
- Job menu (see What is a job on page 40);
- Read config sheet (see Reading a configuration sheet on page 75);
- Job settings (see Job Settings on page 66).

Opening the Advanced Settings

If you want to see or edit any of the Advanced Settings:

1. From the home menu, press the **[Menu]** button.

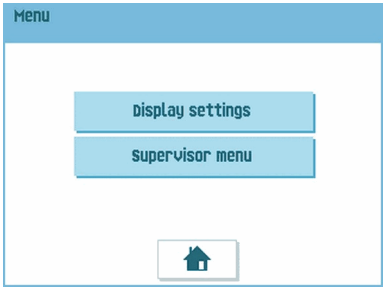

2. Choose if you want to see the Display Settings or the Supervisor Menu. Press the according button to enter that menu. Please note: to access the Supervisor Menu, enter the PIN-code **2546**. After entering the correct pin code the Supervisor Menu appears.

Changing the Display Settings

From the Display Settings screen, you can change various settings.

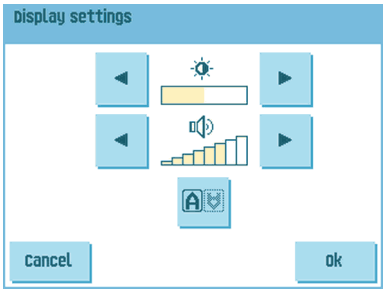

To change the Display Settings:

1. Use the arrows next to the brightness symbol to increase or decrease the display brightness.
2. Use the arrows next to the volume symbol to increase or decrease the interface volume.
3. Press the  button to toggle the orientation of the display screen. This function is useful in case of applications when the operator is working on the backside of the system.

Viewing System info and Software versions

From the Supervisor menu, you can view the System info and Software versions.

Proceed as follows:

1. From the Supervisor menu, press the **[System info]** button.

The System info menu opens.
Here, the following information is shown:

- Flex certificate - this option is used for OMR;
- Counter since last visit - the counter value since the last service visit;
- Last error - The last error generated by the system.

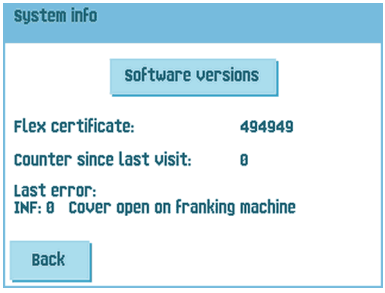

2. Press the **[Software versions]** button to view information on the version of the installed software.

The 'software versions' menu opens.
This screen shows the software versions that are present in the total system, see example.

Pressing the **[i]** button shows the subversion revision numbers instead of the standard software version numbers. Generally these are used for development reasons, but sometimes it's convenient to have them for trouble shooting reasons.

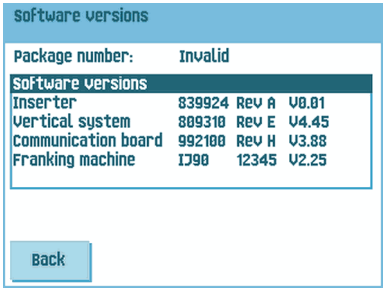

What are licensed options?

The Option menu shows the following information:

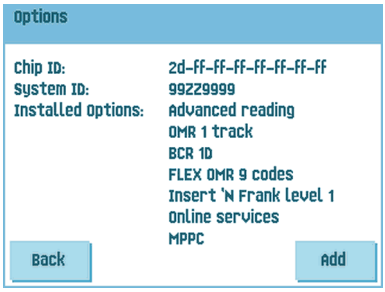

- Chip ID
- System ID
- Installed options.
  These software options are enabled using license codes. These license codes, together with the identification number of the machine enable the relevant options. The enabled and available software options are displayed in this screen. Contact your dealer for information about these license codes.
  The system supports the following licensed options:
  - Advanced reading (see Reading Introduction on page 71);
  - OMR 1 track (see OMR Code Description on page 78);
  - BCR 1D (see BCR Code Description on page 73);
  - Flex reading (see Reading Introduction on page 71);
  - insert'n Frank / insert'n Mail (INF) (see Mailing and Franking settings on page 57);
  - MPPC (see the operator manual 'Mail Piece Production Control');
  - OLS (see Online Services introduction on page 83).

Activating an option

To add a licensed option:

1. In the Options screen, press the **[Add]** button.

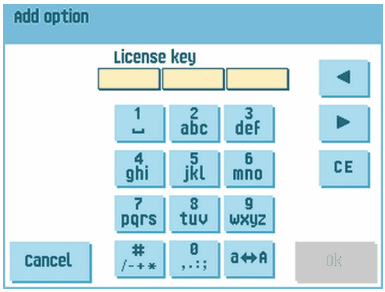

2. Use the keypad to enter the license key code that you received from the supplier to activate the relevant option on this machine.
   If needed, use the arrow keys to navigate through the entered characters.
3. Press the **[OK]** button to add the licensed option.
   The system will now verify the license key.
4. Switch the system off and on.

Test Menu

The Test menu can be used to check the system, reset all photocells and execute reading tests.
The menu consists of the following functions:

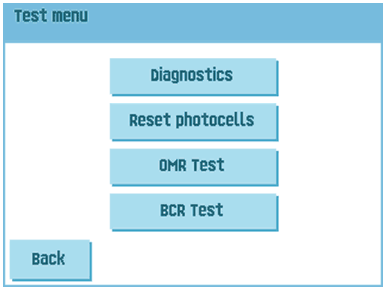

- Diagnostics - Use this function to check if all motors, clutches and sensors are correctly connected. This test derives the status of the actuators and clutches by

briefly activating the actuators and then measuring the current (see Running diagnostics on page 65);

- Reset photocells - Use this function to calibrate all photocells (see Resetting photocells on page 96);
- OMR test - Use this function to test the OMR functionality (see Running an OMR test on page 81);
- BCR test - Use this function to test the BCR functionality (see Running a BCR test on page 77).

Running diagnostics

To run a diagnostics of the system:

1. In the Test menu, press the **[Diagnostics]** button. The Hardware test screen appears.

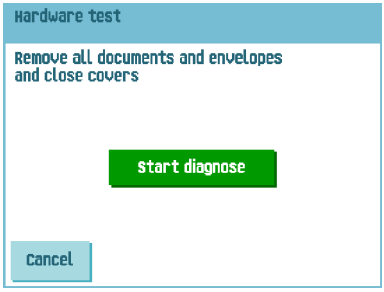

2. Remove all documents and envelopes and close all covers before starting the diagnose.
3. In the Hardware test menu, press the **[Start diagnose]** button.
   When the test is finished, the Status report is shown, showing a list of all problems found during diagnostics.

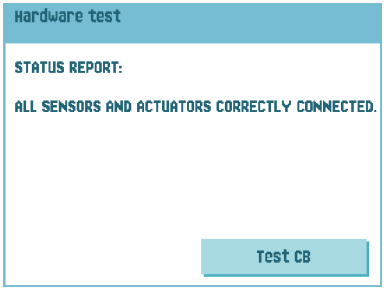

4. If no problems were found, press the **[OK]** button.

   If problems have been found that can not be solved, call your service organization.

Job Settings (Supervisor)

Job settings normally will be changed by a service engineer only. Therefore first consult the supplier's Helpdesk before changing any settings. Changes to the job settings can result in malfunctioning of jobs.

The "job settings" menu (supervisor) can be opened from the "supervisor menu". From this menu system parameters can be set.
The "job settings" menu shows the following functions:

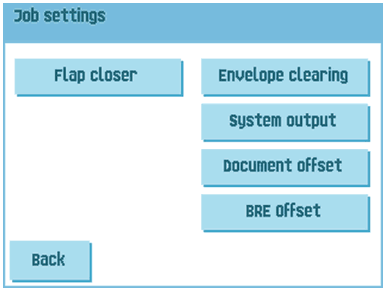

- Flap Closer - Use this option to improve the envelope sealing process by changing the flap closer offset for one or more defined jobs (see Changing the Flap Closer Offset on page 67);
- Envelope clearing - Use this option to define when envelopes are cleared from the system (see Changing the Envelope Clearing on page 67);
- System output - Use this option to change the output mode for one or more defined jobs (see Changing the System Output on page 68);
- Document offset - Use this option to change the document offset for one or more defined jobs (see Changing the Document Offset on page 69);
- BRE offset - Use this option to change the BRE offset for one or more defined jobs (see Changing the BRE Offset on page 69).

Flap Closer Offset

To change the flap closer offset for a selected job:

1. Use the arrows next to "Select job" to select for which job (Job 1-25 or Auto) you want to make the changes.

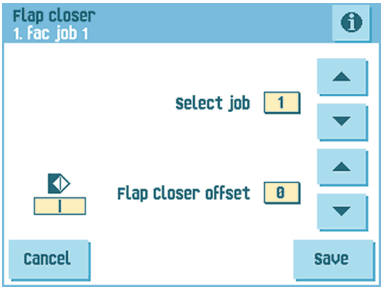

2. Use the arrows next to "Flap Closer offset" to change the Flap closer offset for the selected job.
   The offset can be varied between -20 and 20. If for example the offset is set to +10 the sealing process will be activated 10 pulses later than initially.
3. Press the **[Save]** button to save the changes to the selected job.

Envelope Clearing

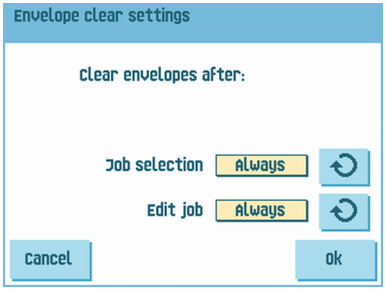

To define when envelopes are cleared:

1. Use the  next to "Job selection" to set wether the envelopes should be cleared (always, never or only after asking) when the operator selects a job.
2. Use the  next to "Edit job" to set wether the envelopes should be cleared (always, never or only after asking) after the operator has edited a job.
3. Press the **[OK]** button to accept the changes.

System Output

To change the output mode for a selected job:

1. Use the arrows next to "Select job" to select for which job (Job 1-25 or Auto) you want to make the changes.

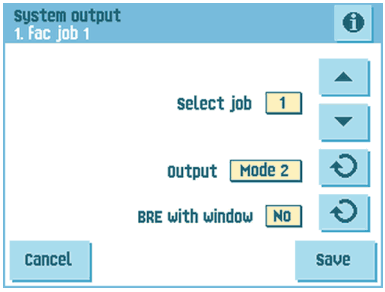

2. Use the  next to Output to change the Output mode for the selected job.

   Mode 1 focuses on the versatility of paper parameters (paper thickness; document length), i.e. correct operation under even extreme paper conditions.

   Mode 2 is the default mode, and focuses on high speed and is achieved as follows:

   - During multi feed (more than one page from one feeder) the movement on the collator is minimal. In mode 1 the divert unit will be used for completing the collating process.
   - During the transportation of a set from the collator into the powerFold, the next set is going into the collator already. This results in temporary overlapping sets with two different transport directions. In mode 1 the set has left the collator completely before the next set enters the collator.
   - Anticipation call for the envelope is used. That means that a (folded) set is leaving the powerFold already before the envelope is ready on the insert position. In mode 1 the envelope is on the insert position already before the set leaves the powerFold.

   It is advised to use Mode 1 with a paper thickness of 65 g/m2 or less, a document length of 12 inch (305 mm) or higher, and for situations where Mode 2 is not functioning properly. In all other cases Mode 2 is advised.

3. Use the  next to BRE with window to select if the reply envelope has a window or not.



This option is only available for Output mode 2.

4. Press the **[Save]** button to save the changes to the selected job.

Changing Document Offset

To change the document offset for a selected job:

1. Use the arrows next to "Select job" to select for which job (Job 1-25 or Auto) you want to make the changes.

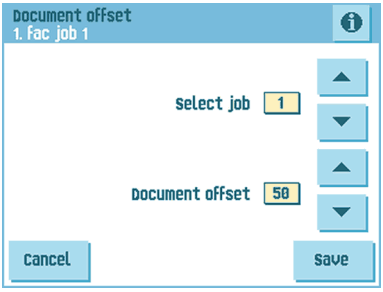

2. Use the arrows next to "Document offset" to change the Document offset for the selected job.

   The vertical transport of documents fed by the various feeders is arranged in such a way that the documents are partially overlapping each other. This overlapping scheme ensures that the documents are properly aligned in the collator area.
   In the “document offset” menu you can set the extend to which the documents are not overlapping each other, i.e. the document offset value. The default value is 50 mm (2.0 inch). The document offset can be varied between 20 mm (0.8 inch) and 250 mm (9.8 inch).

3. Press the **[Save]** button to save the changes to the selected job.

Changing BRE Offset

To change the BRE offset for a selected job:

1. Use the arrows next to "Select job" to select for which job (Job 1-25 or Auto) you want to make the changes.

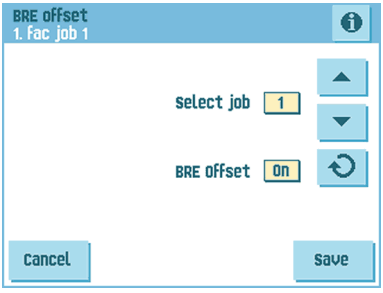

2. Use the  button next to BRE with window to set the BRE offset to On of Off.

If a document is longer than the set address fold but shorter than the envelope height, this document sometimes will be unnecessarily folded. Under certain conditions this document can be prevented from being folded. This can be implemented with the menu “BRE offset” (BRE means Business Reply Envelope).
For each of the jobs 1 through 25 and Automatic an offset can be switched on or off using the button.
In the case of offset “on” the last document that was added to the set will be shifted from the rest of the set (offsetting). This document will be held back during a certain distance. This means that the trailing edge of this upper document leaves the collator at last. This document will not be folded. During the insertion into the envelope the documents of the set will be realigned.
The conditions are:

- The feeder that supplies this upper document (BRE) is set to one document per set (no multi feeding).
- The document directly beneath this document must be at least 60 mm (2.4 inch) longer than the BRE.
- The upper document must be longer than the set address fold.
- The folding mode is either V-fold or C-fold (no Z-fold).
- The upper document must be shorter than the envelope height.

The whole BRE offset is based on friction between documents within a set. Therefore it is necessary to make use of these conditions to reduce the risk of bad transporting, folding and inserting.



It is possible to use the BRE offset for a BRE and an enclosure (card) in one set. The extra condition is that this enclosure is equal to or smaller than the set address fold and should be placed direct underneath the BRE in the set.

3. Press the **[Save]** button to save the changes to the selected job.

7 Reading

Introduction

The folding and inserting system can be equipped with reading. This allows the system to read special codes that have been printed on the documents. These codes contain information about the processing of the sheets. Three types of codes are available:

- 1-track OMR: Optical Mark Recognition

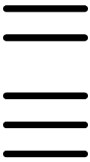

- BCR: BarCode Reading



- Flex 1-9

Depending on the settings, the code tells the system if:

- The document set is complete
- Enclosures must be added to the set
- The system must stop
- The set is complete (no pages are missing)

The sheets with the printed code are placed in a feeder. Depending on the programmed code, the other feeders can be used as selective feeders to add enclosures.
In case of a Z-fold, the address has to be printed on the last page of the set (see Document orientation on page 73 for the code position). With the other fold types, the first sheet of a set always contains the address. A full length code is printed on every sheet of a set. The code must appear at the same location on every page regardless of the actual code length.

The code on the last sheet of the set contains the insert instruction (unless reverse reading is used, see Reverse reading on page 72). The other sheets carry the accumulate instruction. If a parity check is used with OMR, this is checked on each sheet. If the “page n of m” code is used with BCR, the set will be inserted when n equals m.

General requirements for printing codes

If you print documents for reading:

- Make sure the ribbon or toner quality is sufficient.
- Print the code in black.
- Codes on the same sheet must have equal intensity.
- Print the code at the same position on every sheet.
- Be aware of "background noise". The reading function can be disturbed by: color changes on the form, background design and a logo or copy on the opposite side of the sheet that will bleed through.
- For matrix printers near letter quality (NLQ) printed characters are preferred to obtain maximum blackness (double strike).



For more information on how to print a reading code on your document, contact your service organization.

Reverse reading

Reverse reading means that the insert mark (OMR) is on the first page of the set. The system will detect the end of a set by detecting the first page of the next set. In case of BCR use the Customer ID to complete a set. If the ID changes, the set is inserted.

When reverse reading is used, the reverse reading symbol is shown in the "Job info" screen. In case the feeder runs empty, the last set is still on the collator because the beginning of the next set could not be detected. In this case the feeder empty message contains an **[Ignore]** function. By pressing the **[Ignore]** button the set on the collator will be inserted.

Because of the feeding and collating principle, reverse reading has the following limitations:

- The last mark of the code should be printed maximally 85 mm (3.3 inch) from the top.
- Enclosures and selective enclosures cannot be handled.



When a versaFeeder module is added to the system configuration, enclosures and selective enclosures can be handled with reverse reading.

Document Orientation

Switch on the reading function and set the position of the reading marks as described in BCR Code Description on page 73 and OMR Code Description on page 78.

Document orientation:

<table>
<tr><th colspan="2">Fold type</th><th colspan="2">Type of documents</th></tr>
<tr><td>no fold</td><td>V-fold</td><td rowspan="2">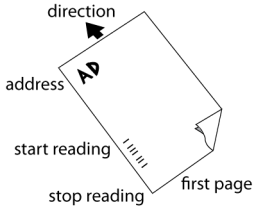
</td><td rowspan="2">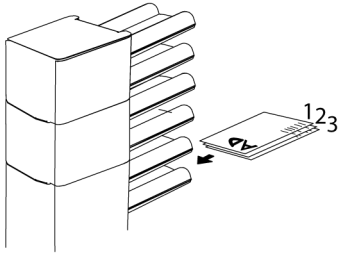

Address carrier, face up and leading.</td></tr>
<tr><td>C-fold</td><td>double V-fold</td></tr>
<tr><td colspan="2">Z-fold</td><td>(duplex printed)
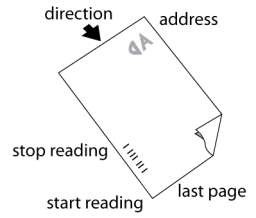
</td><td>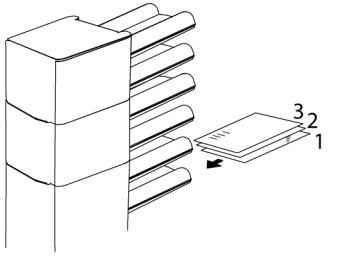

Address carrier, face down and trailing.</td></tr>
</table>

BCR Code Description

Position of the code on the document.

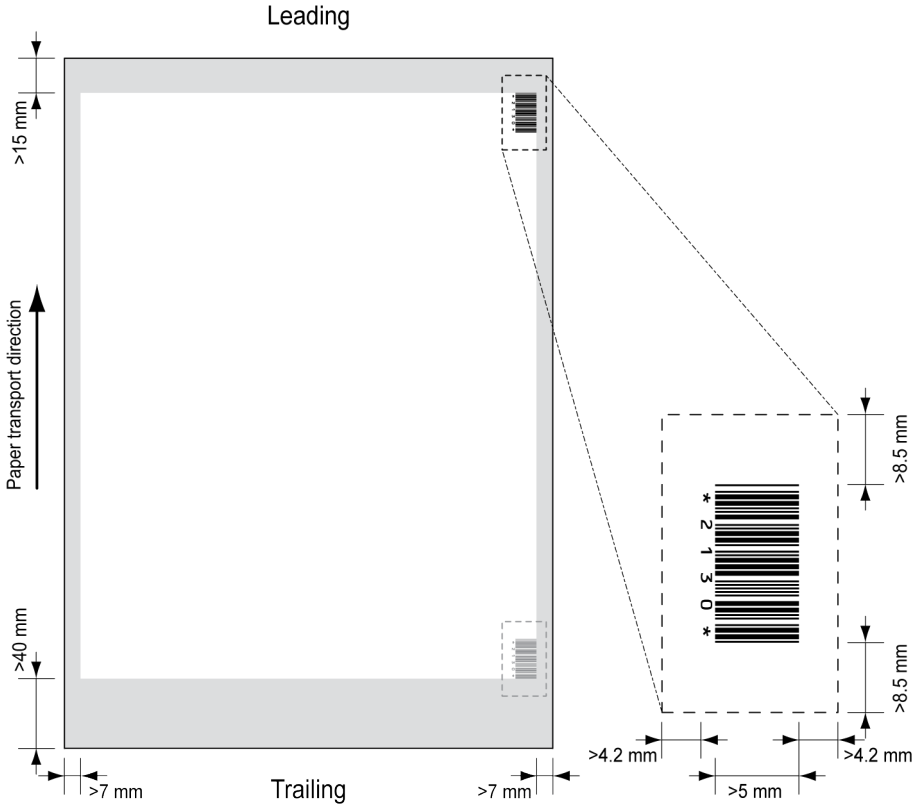

Minimum line thickness of a bar: 0.25 mm (0.01 inch)

The thickness ratio of thick bars versus thin bars: 2.2

The white area in the picture shows the limits where the code can be printed.

BCR license types

There are two BCR license types:

- Basic
- Advanced

BCR basic license

For the BCR basic license the following functions are available:

- Page N of M: as long as N is below M, the document set is not complete. As soon as N=M, the set is complete and will be inserted into an envelope.
- Insert/Accumulate: defines when a document set is complete and must be inserted into an envelope.
- Customer ID: BCR uses the Customer ID code to complete a set. This is only possible with reverse reading. If the ID changes, the set is inserted.

At least codes for accumulate and insert are required.

BCR advanced license

For the BCR advanced license the following functions are available:

- The basic functions (page N of M, insert/accumulate, Customer ID)
- Sheet sequence - every sheet has a number, regardless of the document set it is part of. If a sheet is missing, an error is generated.
- Group sequence - every document in a set has the same group number. If one document set is missing, an error is generated.
- Selective feed - if the system reads the command, an enclosure from the enclosure feeder is added to the set. This function is printed on the last sheet of a set.
- Divert (Divert & Continue) - The set will be diverted and the system continues.
- Stop (Divert & Stop) - The set will be diverted and the system stops indicating error (VS:113 - Reading stop - Stop mark read).

Reading a configuration sheet (BCR only)

If you want to set the code definition for BCR, you can use a BCR configuration sheet.

To read a configuration sheet:

1. In the Supervisor menu, press the **[Read config sheet]** button.The Barcode configuration sheet menu appears.

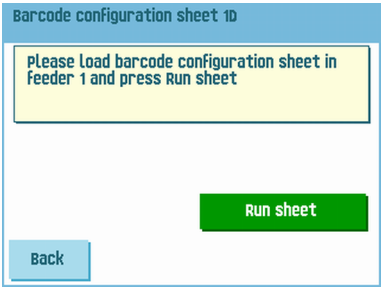

2. Load the barcode configuration sheet in the top feeder.

3. Press the **[Run sheet]** button.The BCR settings screen appears.

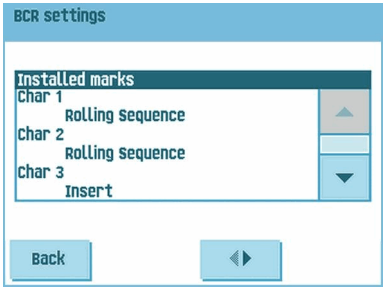

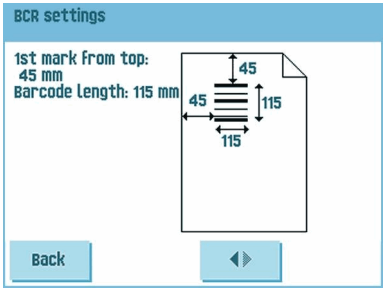

4. In the BCR settings screen, confirm that all settings are read correctly.
Note that this screen consists of two parts. Use the arrows at the bottom of the screen to navigate between the two parts of this screen.
5. Press the **[Back]** button to leave the BCR settings menu.
6. Press the **[Save]** button to save the BCR settings that were read from the configuration sheet.

Saving these settings will change, depending on the chosen code type, the barcode definition for jobs where 1D or 2D BCR (if available) is used.

Running a BCR test

To run a BCR test:

Before running a BCR test, select a job that uses BCR reading.

1. In the Test menu, press the **[BCR test]** button. The BCR test menu appears.

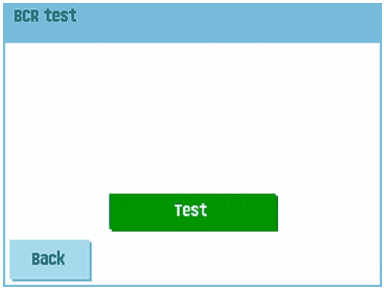

2. Press the **[Test]** button to start the BCR test. After the test is finished, the Result screen appears.

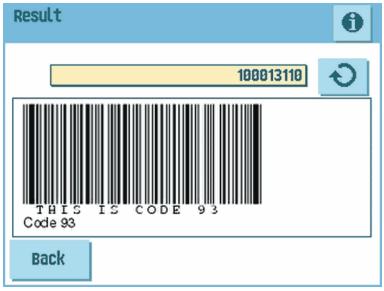

3. In the Results screen, evaluate the test results.

   Use the button to see the BCR info, or use the button to cycle through all BCR codes that were detected during the test. Select the one you want to use for reading.

4. Press the **[Back]** button to return to the BCR test menu.

OMR Code Description

Position of the code on the document:

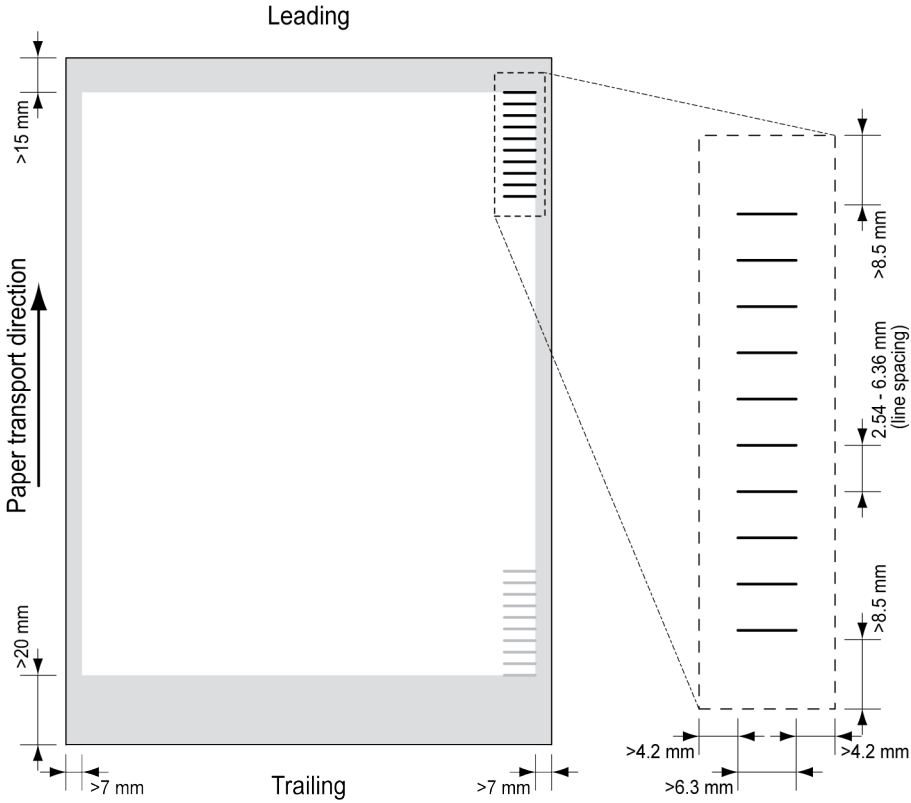

Minimum line thickness of a mark: 0.2 mm (0.008 inch)

Default the first mark from the top is set to: 100 mm (3.9 inch). This parameter is set in the job settings.

The code must have a consistent number of marks on every page.

The white area in the picture shows the limits where the code can be printed.

OMR license types

There are two OMR license types:

- Basic
- Advanced

OMR basic license

For the OMR basic license the following functions are available:

- Start mark: indicates the start of the code.
- Insert/Accumulate: defines when a document set is complete and must be inserted into an envelope.
- Parity check: by adding a parity mark the reading code can be checked. The sum of the marks must be even.
- Safety Mark: is used as an extra security. With skewed paper the reading head can miss part of the reading code. In these situations the safety mark is not read, and the system will give an error. The safety mark also indicates the end of the reading code. This mark must always be present on the document if it is part of the code definition.

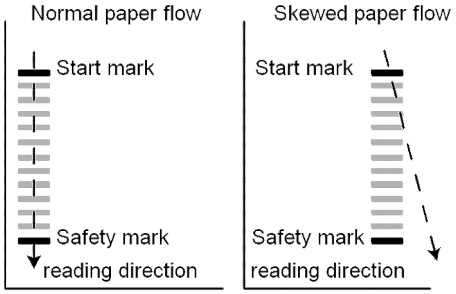

The minimum code is one mark in one line (insert). However for reliability it is advised to use at least 2 marks. The first line is the start mark. A mark printed on the second line means insert. No mark on the second line means accumulate.

In some cases, on request of the customer, the reading of the basic commands can be reversed by the service organization. This means that no mark is interpreted as an insert command and that for the accumulate command a mark has to be printed.

OMR advanced license

For the OMR advanced license the following functions are available:

- The basic functions (Start, Insert, Parity, Safety)
- Divert (Divert & Continue) - The set will be diverted and the system continues.
- Stop (Divert & Stop) - The set will be diverted and the system stops indicating error (VS:113 - Reading stop - Stop mark read).
- Selective Feed - The machine will selectively feed an enclosure when commanded so.
- Sequence Check - Sheets in a stack can accidentally get out of sequence or can be missing. This can be detected by the sequence check. Each sheet has a binary code that is a part of the reading code. Depending on the application one, two or three marks are used by sequence check.

OMR general remarks

General remarks:

- In case of OMR the marks must always be used in the sequence as shown in the figure.

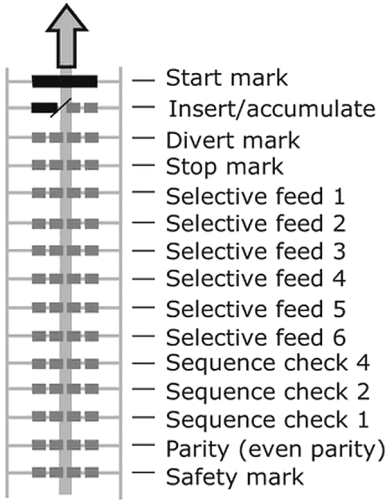

- If a function is suppressed the following function will move upwards one line.
- The mark definition is a service setting.

An Example of OMR Code

In the figure the legend for the following example is shown. In this example, a set of 8 sheets with one selective feed and three sequence check marks is shown.

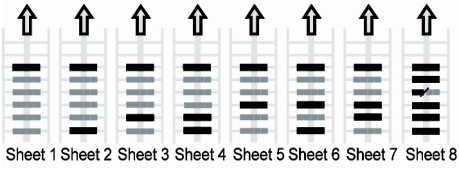

- The first position is used for the start mark which must be printed on every sheet.
- The second mark position is used for the insert/accumulate command. A printed mark means insert, no mark means accumulate. Therefore the mark is printed on the last sheet of the set.
- Position 3 is reserved for selective feed from the enclosure feeder. Print a mark on position 3 when a selective feed from the enclosure feeder is required. The marks are printed on the last sheet of the set.
- Position 4, 5 and 6 are used for the sequence check marks. In this case a three mark sequence check is used.

Running an OMR test

To run an OMR test:

Before running an OMR test, select a job that uses OMR reading.

1. In the Test menu, press the **[OMR test]** button. The OMR test menu appears.

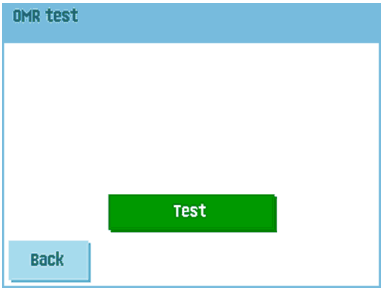

2. Press the **[Test]** button to start the OMR test. After the test is finished, the Result screen appears.

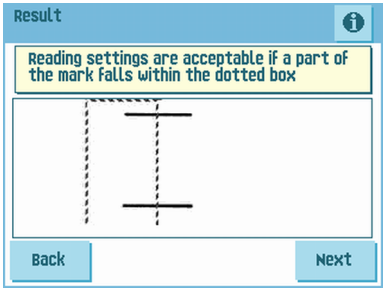

3. In the Results screen, evaluate the test results.

   Use the button to see the OMR info.

4. Press the **[Back]** button to return to the OMR test menu.

8 Online Services

Online Services

The folding and inserting system can be equipped with Online Services. This option enables the system to connect to a central server. During the connection data is downloaded to and uploaded from the system. The system always initiates the connection, it is not possible to make a connection from outside to the system.
Ask your supplier if this option is available.

Start-up Online Services

To start-up Online Services:

1. From the supervisor menu choose **[Online services]**.

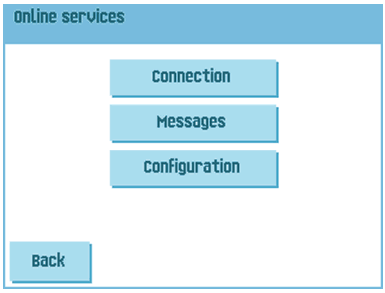

The ‘Online Services’ menu shows the following functions:

- Connection: opens the ‘connection’ menu to create a connection to a central server and to view the connection history (see Connecting to the server on page 85).
- Messages: opens the ‘messages’ menu to view received messages (see Viewing messages on page 86).
- Configuration: opens the ‘configuration’ menus to change Online Services settings (see Configuration Menu on page 88).

2. From the supervisor menu choose **[Online services]**.

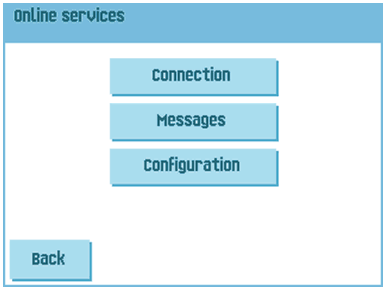

The ‘Online Services’ menu shows the following functions:

- Connection: opens the ‘connection’ menu to create a connection to a central server and to view the connection history (see Connecting to the server on page 85).
- Messages: opens the ‘messages’ menu to view received messages (see Viewing messages on page 86).
- Configuration: opens the ‘configuration’ menus to change Online Services settings (see Configuration Menu on page 88).

Connecting to the server

The system makes a connection on fixed times. It is possible that you manually connect the system to the server.
To connect to the server:

1. Press **[Connection]** in the Online Services menu. The touch screen shows the connection menu.

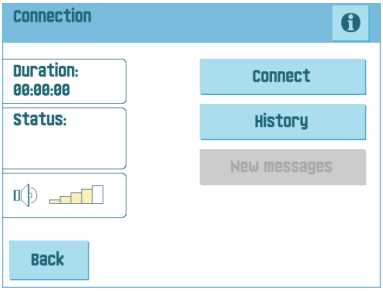

2. Press **[Connect]** to manually connect the system to the OLS server.You can view the status of the connection on the screen. The text on the button changes to Disconnect.
3. Press **[Disconnect]** to terminate connection with the server.

   The ‘connection’ menu shows the following functions:

   - History: opens the ‘history’ menu to view the connection history (see Viewing the history on page 86).
   - New messages: this button appears when the system received new messages and opens the ‘messages’ menu (see Viewing messages on page 86).

Viewing the history

The ‘history’ menu shows previous connections of the system to the server.

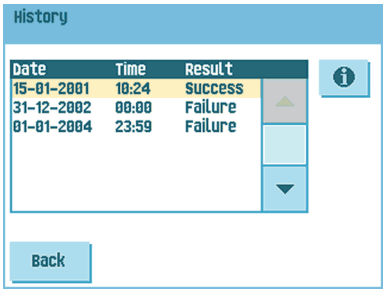

To view the history:

1. Press the arrows to select a previous connection.
2. Press the button to view details on selected previous connection.

Viewing messages

After pressing Messages in the ‘Online Services’ menu the touch screen will show messages received from the server. A message has content like a new job or new software.



To view the messages:

1. Press the arrows to select a message.

   In case a new job or new software can be installed the Continue button appears.
2. Press the button for more information over a selected message.

Installing a new job or new software

After pressing Messages in the 'Online Services' menu the touch screen will show messages received from the server.
In case a new job or new software can be installed the Continue button appears.

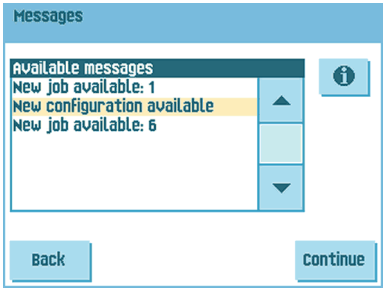

To install a new job or new software:

1. Press **[Continue]**.The new job available menu or new software menu appears.

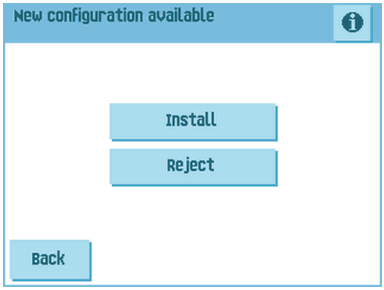

2. Press the  button for more information on the new job or new software.
3. Press **[Install]** to install the new job or new software
   or
   press **[Reject]** to reject it.After pressing **[Install]** a confirmation menu opens:



4. In case of a new job:
   Press the arrows to select a free job number (see Creating a new job on page 40).
   and
   Press **[OK]** to confirm the selected job number or press Cancel to return to the 'new job available' menu.
5. In case of new software:
   Press **[OK]** to confirm the installation or **[Cancel]** to return to the new software menu.

   After confirming the installation of the new job or new software the 'message' menu appears.

Configuration Menu

After pressing Configuration in the 'Online Services' menu the 'configuration' menu opens. Use this menu to modify the OLS settings.

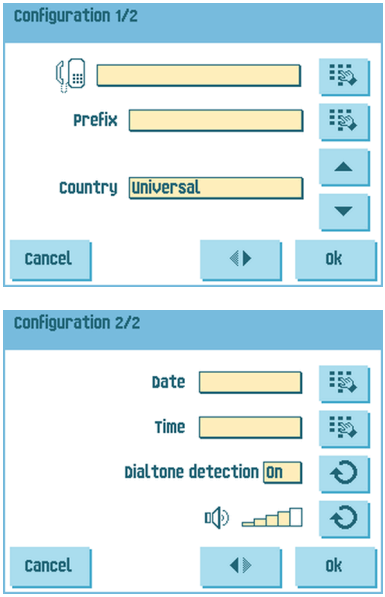

The menu consists of two submenus containing the following functions:

- Telephone number of server: contact your supplier for the telephone number of the OLS server.
- Prefix: use this function in case you need to dial a certain number or string to access an outside line.
- Country: the country from where you are dialing.
- Date and time: current date and time.
- Dial tone detection on/off : This setting is required if no dial tone is heard during establishing a connection. The default value is on. This setting is relevant to some PABX telephone switch systems.
- Volume of modem: set the modem volume.

Setting the telephone number

To set the number:

1. Press the  button next to the telephone number.

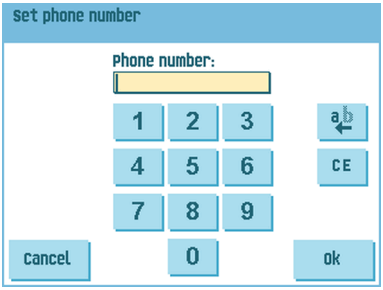

2. Enter the correct number using the numeric keypad.
3. Press **[OK]** to confirm the new number.
4. Press **[OK]** to confirm the modified settings and leave the Configuration Menu.

Setting the prefix

To set the prefix:

1. Press the  button next to the prefix.

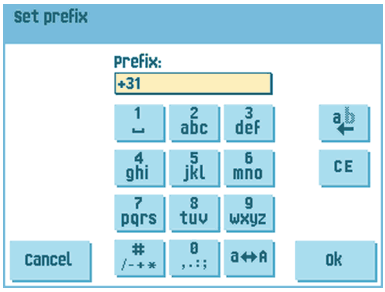

2. Enter the correct prefix using the numeric keypad.
3. Press **[OK]** to confirm the new prefix.
4. Press **[OK]** to confirm the modified settings and leave the Configuration Menu.

Selecting the country

To select a country from where you are dialing:

1. Use the up and down arrows to select the country from where you are dialing.

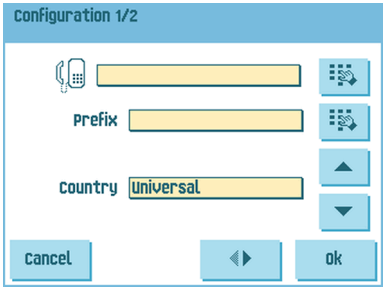

2. Press **[OK]** to confirm the modified settings and leave the Configuration Menu.

Entering date and time

To enter the current date and time:

1. Press the  button next to the date/time.

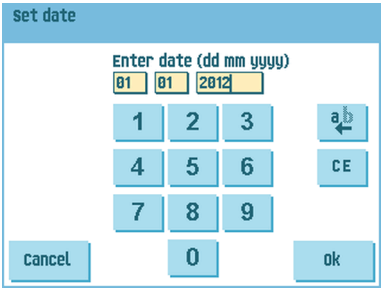

2. Enter the correct date/time using the numeric keypad.
3. Press **[OK]** to confirm the new date/time.
4. Press **[OK]** to confirm the modified settings and leave the Configuration Menu.

Setting the dial tone detection

To toggle the dial tone detection:

1. Press the  button next to dialtone detection to toggle the dial tone detection on/off.

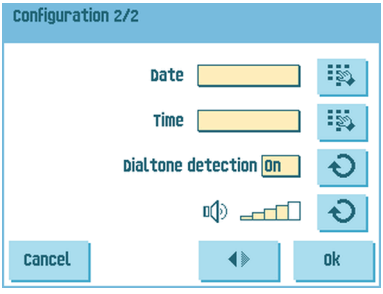

2. Press **[OK]** to confirm the modified settings and leave the Configuration Menu.

Setting the modem volume

To set the modem volume:

1. Press the button next to the volume symbol to increase/decrease the modem volume. Do not set the volume to zero as the sound of the modem is helpful during remote assistance.

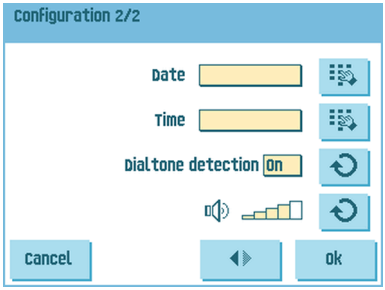

2. Press **[OK]** to confirm the modified settings and leave the Configuration Menu.

9 Operator Maintenance

Maintenance Schedule



Disconnect the mains power supply before performing any maintenance.

The user must not attempt to service the appliance beyond that described in this operator manual. All other servicing must be carried out by qualified service personnel only. Please contact your authorized distributor.

Maintenance frequency	Maintenance
Daily	• Check the system functions. • Keep the system in proper condition by removing dust, paper remains, etc.
Weekly	The machine is delivered with an extra set of brushes. To always have one clean set available, it is recommended to soak one set in water and use the other set. • When dirty or saturated, clean the brushes of the envelope sealing or replace them (see Clean and replace brushes on page 94). • When dirty or saturated, clean the moistening cloth or replace if necessary (see Replace moistening cloth on page 94). • Clean feed and insert rollers as instructed by the Service Engineer.
When necessary	When the display warns about dusty sensors, certain sensors have to be cleaned. After cleaning, always calibrate the photocells (see Resetting photocells on page 96). For the sensors on the envelope or document path, see Clean the sensors on the envelope or document path on page 95. For the exit sensors, see Clean exit sensors on page 96.

Clean and replace brushes

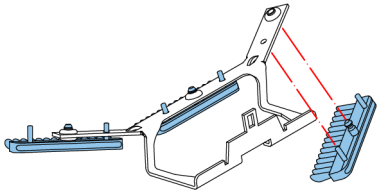

When dirty or saturated, clean the brushes of the envelope sealing or replace them as follows:

1. Moisten the new brushes in water.
2. Remove the brushes one by one by pulling them down from the brush holder.
3. Replace the brushes. Make sure that the studs on the brushes are fitted in the corresponding holes in the brush holder.

Replace or clean moistening cloth

When dirty or saturated, clean the moistening cloth or replace if necessary. Proceed as follows:

1. Remove the sealing liquid reservoir from the system.
2. Remove the cover with moistening cloth D.
3. Remove clips C to remove the moistening cloth.
4. Clean or replace the cloth.

Clean the sensors on the envelope or document path

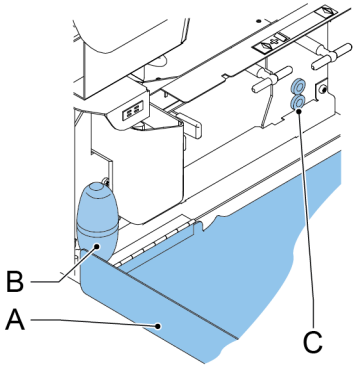

When the display warns about dusty sensors in the envelope or document path, clean them as follows:

1. Open side cover A.
2. Place bellows B in the upper air plug C and firmly squeeze a few times to blow the dust from the document path sensor.
3. Place the bellows in the lower air plug and firmly squeeze a few times to blow the dust from the envelope path sensor.
4. Calibrate the photocells (see Resetting photocells on page 96).

Clean the exit sensors

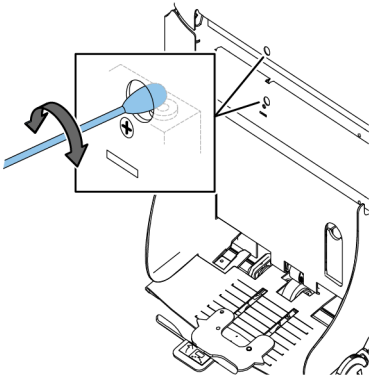

To clean the exit sensors:

1. Rotate a slightly moistened cotton swab in the lower hole, to clean the lower exit sensor.
2. Rotate a slightly moistened cotton swab in the upper hole, to clean the upper exit sensor.
3. Calibrate the photocells (see Resetting photocells on page 96).

Resetting Photocells

To calibrate all photocells:

1. In the Test menu, press the **[Reset photocells]** button. The Calibrate photocells menu appears.

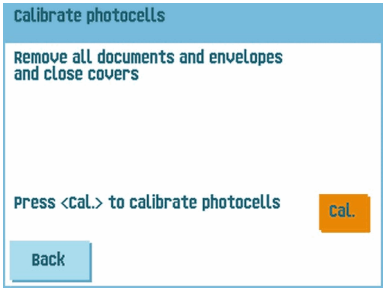

2. Remove all documents and envelopes and close all covers before starting the calibration.
3. In the Calibrate photocells menu, press the **[Cal.]** button.
   When the calibration is finished, the system returns to the Calibrate photocells menu.

10 Fault Finding

Error Messages

When an error occurs the display shows a screen showing the following information:

- An indication of the area in which the error occurred
- An error description
- A suggested solution behind the pointing hand

Press the  button to view more information about the occurred error and about the possible actions to avoid the error from re-occurring.

After solving the problem, press **[Reset]** to reset the error (the error screen will disappear).

Special Errors

- Reading errors (when reading is enabled)
  The document set is diverted. The operator must remove the document set and has to complete the set manually!
- Technical errors
  The display shows a message. The error cannot be solved by operating personnel and assistance of the service support is needed.

Warning Screen

When a cover is opened, the display shows a warning screen with the message “Cover open and a suggested solution “Close cover”.

Clearing Stoppages

Stoppages can occur in the following areas:

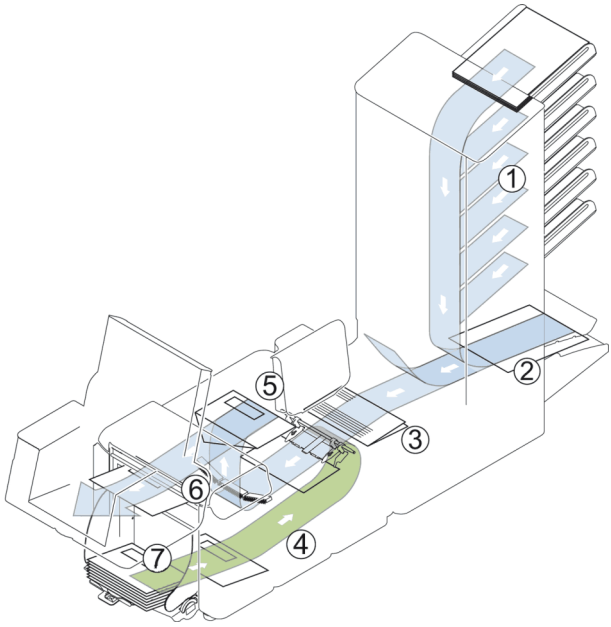

1. flexFeed area
2. Collating area
3. powerFold area
4. Lower envelope track
5. Moistening and inserting area
6. Sealing and exit area
7. Envelope hopper

For clearing of stoppages, six system sections can be opened:

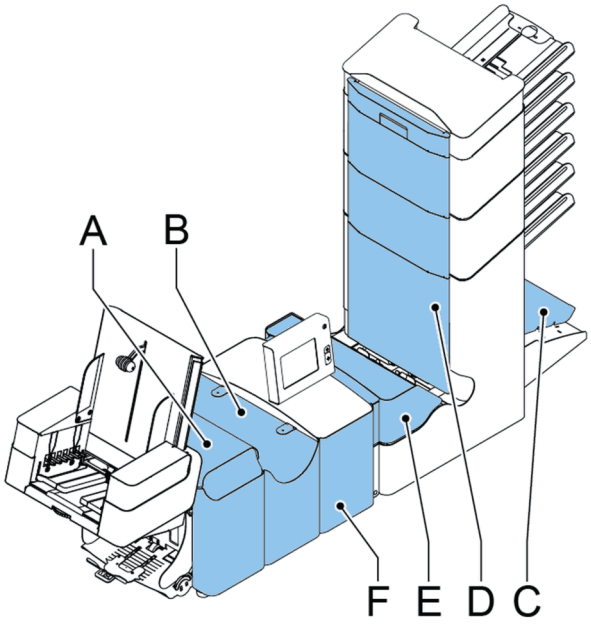

A - loc cover, to reach the sealing and exit area

B - inserter cover, to reach the moistening and inserting area

C - collator arm, to reach the collating area

D - vertical transport cover, to reach the vertical transport and feeding area

E - powerFold cover, to reach the folding area

F - side cover, to reach the lower envelope track

Exit, Sealing and Inserting Area

When a stoppage occurs in this area, remove the material as follows:

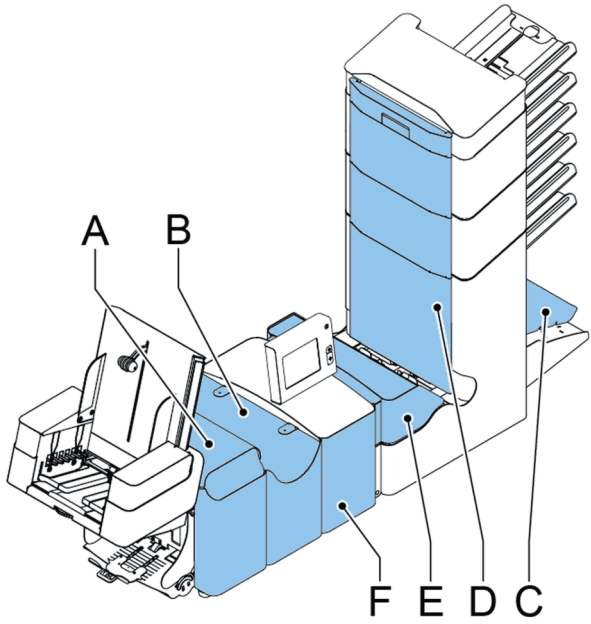

1. Open the side cover **F**.
2. Lift the locking lever of the loc and pull the loc up into the vertical position.
3. Remove all material.
4. Close the side cover.
5. Lower the loc and the inserter cover.
6. Press the **[Reset]** button to reset the error and restart the job.

Envelope Hopper

When an envelope gets stuck in this area, remove the envelope as follows:

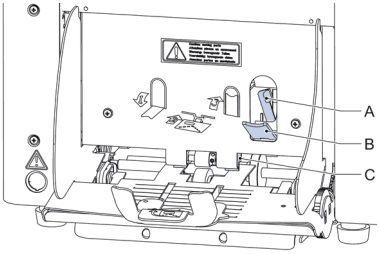

1. Pull down small lever **B**. Pins **C** will come down.
2. Push lever **A** to the right and hold it. Pins **C** will go up.
3. Remove the stuck envelope.
4. Release lever **A**.
5. Make sure the separation setting is still correct (see Loading Envelopes on page 19).
6. Return lever **B**.
7. Press the **[Reset]** button to reset the error and restart the job.

Lower Envelope Track

When a stoppage occurs in the lower envelope track, remove the envelopes as follows:

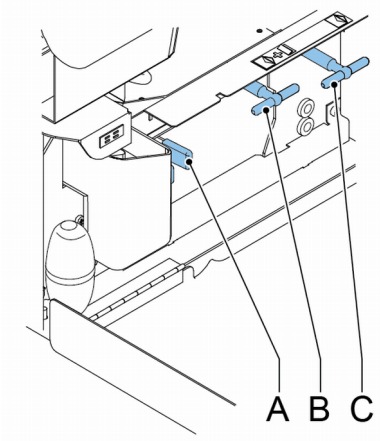

If needed, envelopes can be transported manually to the insert table or lower envelope track by means of handle **C**. To transport a mail set manually, turn handle **B**.

1. Open the side cover.
2. Squeeze blue handles **A** to unlock the rollers of the envelope track.
3. Remove the envelope(s) from the lower envelope track.
4. Close the side cover.
5. Press the **[Reset]** button to reset the error and restart the job.

PowerFold

When a stoppage occurs in the powerFold, remove the documents from the powerFold as follows:

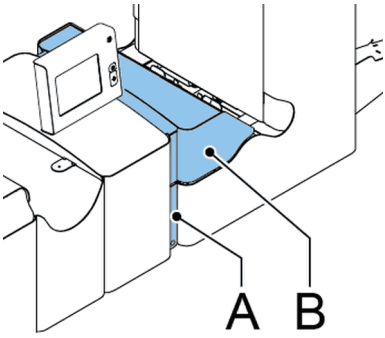

1. Push the lower end of the locking handle **A** to open the powerFold cover **B**.
2. Remove the documents from the powerFold.

If necessary use the delivered pin to turn the rollers. The pin is delivered in the spare parts bag. Do not forget to remove the pin when finished.

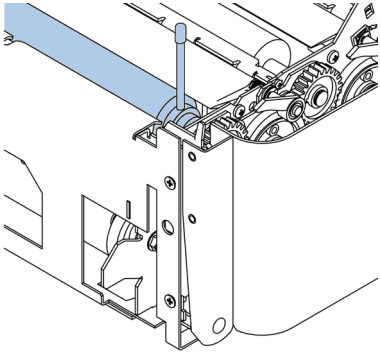

3. Close the powerFold cover.
4. Press the **[Reset]** button to reset the error and restart the job.

FlexFeed

When a stoppage occurs in the flexFeed, remove the documents from the flexFeed as follows:

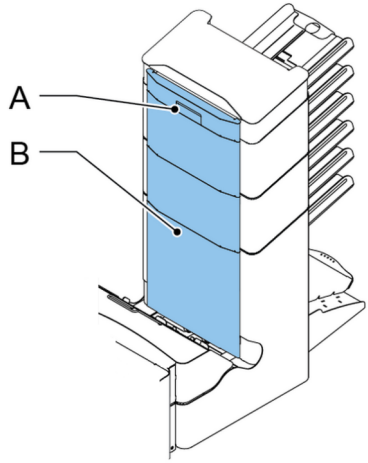

1. Pull the vertical transport hand grip **A** upward to open the vertical transport cover **B**.
2. Remove the documents.
3. Close the vertical transport cover **B**.
4. Press the **[Reset]** button to reset the error and restart the job.

Collating Area

When a stoppage occurs in the collating area, remove the documents from the collating area as follows:

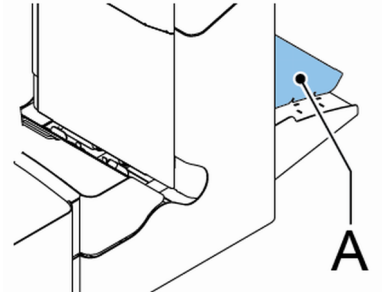

1. Lift and hold the collator arm **A**.

2. Remove the documents.
3. Lower the collator arm.
4. Press the **[Reset]** button to reset the error and restart the job.

Operator Troubleshooting

To resolve problems:

1. Write down the error.
2. Try to solve the problem by consulting the troubleshooting table.
3. Switch the inserter off and on again, to verify system operation.
4. When the error still occurs contact your service organization.

When contacting the service organization, you will also be asked for the last error message and the software version of the installed software. To determine the software version, see Viewing System info and Software versions.

Trouble Shooting Table

Symptom	Possible cause	Remedy	Reference
The system cannot be started after switching on.	System not connected to mains.	Connect the system to the mains.	-
	Fuse is blown.	Replace fuse below power switch.	-
	A cover is opened.	Close the covers.	-

System stops with envelope at insert position (flap not open).	Envelopes stacked reversed in the hopper.	Check envelope feed adjustments. Place envelopes correctly in hopper.	Loading Envelopes on page 19
	Envelope flap sticks.	Store envelopes according to specifications.	Envelope settings on page 49
	Wrong envelope type used (not according to specifications or job settings).	Change envelopes according to specifications.	Envelope settings on page 49
Envelopes are double fed.	Envelope separation not correctly set.	Adjust envelope separation.	Loading Envelopes on page 19
	Envelopes not placed properly in the hopper.	Check and replace if needed.	Loading Envelopes on page 19
Envelope stops skewed.	Side guides of the envelope hopper are set too wide.	Check side guides and adjust if needed.	Loading Envelopes on page 19
Envelopes are fed irregularly.	Hopper almost empty.	Refill hopper.	Loading Envelopes on page 19
	Separation set too narrow.	Adjust envelope separation.	Loading Envelopes on page 19
	Side guides set too narrow.	Check side guides and adjust if needed.	Loading Envelopes on page 19
	Envelope support not positioned correctly.	Reposition the envelope support.	Loading Envelopes on page 19
Flap is wrinkled and sometimes not opened.	Envelope not within specifications.	Check specifications and change envelopes if needed.	Verifying the Insert Position on page 39
	Flap sticks.	Store envelopes according to specifications.	Verifying the Insert Position on page 39
	Flap curled.	Envelopes stored or manufactured improperly.	Verifying the Insert Position on page 39
	Separation set too narrow.	Adjust envelope separation.	Loading Envelopes on page 19

Fingers are placed on top of the envelope.	Fingers adjusted too deep into the envelope.	Check fingers position, adjust if needed.	Adjusting the envelope insert fingers on page 38
	Envelope stops too early.	Check envelope stop position, adjust if needed.	Verifying the Insert Position on page 39
System stops while inserting (stoppage at the inserting point).	Fingers not correctly adjusted.	Check fingers position, adjust if needed.	Adjusting the envelope insert fingers on page 38
	Inserted document too long for used envelope.	Check fold settings.	Fold settings on page 52
	Envelope throat incorrect.	Check envelope specifications.	Verifying the Insert Position on page 39
	Envelope glued inside.	Eliminate faulty envelopes.	-
	Window not glued properly.	Eliminate faulty envelopes.	-
Flap not sufficiently moistened.	Water level low.	Check water level, refill if needed.	Filling the Sealing Liquid Reservoir on page 22
	Brushes dry.	Check brushes, replace if needed by the extra soaked set.	Maintenance Schedule on page 93
	Brushes dirty.	Check brushes, clean if needed.	Maintenance Schedule on page 93
	Moistening felt dry.	Check the moistening felt, refill water tray if needed.	Filling the Sealing Liquid Reservoir on page 22
	Moistening felt dirty.	Check the moistening felt, clean if needed.	Maintenance Schedule on page 93
	Brushes worn out.	Replace brushes.	Maintenance Schedule on page 93
	Moistening felt worn out.	Replace moistening felt.	Maintenance Schedule on page 93

Envelope not always ejected from sealer.	Inserted document too big.	Check fold settings, adjust if needed.	Fold settings on page 52
	Document not inserted deep enough.	Check adjustment of envelope stop position and fingers.	Verifying the Insert Position on page 39
	Sealing area dirty.	Clean sealing area.	Maintenance Schedule on page 93
No document fed.	Feeder empty.	Refill feeder.	Filling the document feeder tray on page 18
	Separation set too wide / too tight.	Adjust the separation.	Adjusting Document Separation on page 34
	Side guides set too narrow.	Adjust the side guides.	Adjusting the side guides on page 16
Skewed documents fed.	Side guides set too wide.	Adjust side guides.	Adjusting the side guides on page 16
Double documents fed.	Separation set too wide.	Adjust the separation.	Adjusting Document Separation on page 34
Document set not correctly inserted.	Insert position not correct.	Check insert position.	Verifying the Insert Position on page 39
	Insert fingers not correctly positioned.	Check insert finger position.	Adjusting the envelope insert fingers on page 38
Address not readable from window	Address position not correctly defined.	Check address position.	Adjusting the address position on page 37

11 Specifications

Technical Specifications

Model	DS-85, M8500, FPi 5600, FD6404
Type	Inserter system for medium office use.
Theoretical max. speed	4000 inserts per hour, depending on application.
Power consumption	100V AC/50Hz/3.0 Amps. 115V AC/50/60Hz/3.0 Amps. 230V AC/50Hz/1.5 Amps.
Voltage tolerance	100V: +6% / -10% 115V: +6% / -10% 230V: +10% / -10%
Fuse	100/115 Vac: T 5.0 A, 125 V . Time lag, 5.0 Amps. rated current, 125 V. 230 Vac: T 2.5 A H, 250 V. Time lag, 2.5 Amps. rated current, high breaking capacity, 250 V.
Approvals	EMC Certificate conform EMC-Directive. FCC Certificate conform 47CFR, part 15 CB Certificate conform IEC 60950-1 UL Listed I.T.E. (Information Technology Equipment) Conform UL-IEC 60950-1, file E153801 Conform NEN-EN-IEC 60950-1 and derivatives.
Noise Level	<66 dBA (according to ISO 11202)
Operating temperature	10°C - 40°C (50°F-104°F)
Humidity	30%-80%

Hopper and Feeder Capacity

Envelope hopper	325 envelopes (80 g/m²)
Document feeder tray	325 sheets (80 g/m²)
High Capacity Document Feeder tray	725 sheets (80 g/m²)

Configuration Dimensions

	2 stations	**3/4 stations**	**5/6 stations**
Height	570 mm (22.4 inch)	745 mm (29.3 inch)	920 mm (36.2 inch)
Width	420 mm (16.5 inch)	420 mm (16.5 inch)	420 mm (16.5 inch)
Length*	1340 mm (52.8 inch)	1340 mm (52.8 inch)	1340 mm (52.8 inch)
Weight	88.5 kg (195 lbs)	96 kg (211 lbs)	110 kg (242 lbs)

* Length:

- with receiving tray 1590 mm/62.6 inch
- with side exit 1440 mm/56.7 inch
- with stacker 1840 mm/72.4 inch

Document and Insert Specifications

Paper quality	Minimum 60 g/m² (15 lb bond) Maximum 250 g/m² (62.5 lb bond), when folded max. 170 g/m² (42.5 lb bond) Booklets up to approximately 2 mm (0.08 inch)thickness, depending on stiffness

Paper size	Minimum width: 130 mm (5.1") Maximum width: 242 mm (9.5"), when folded 230 mm (9.1") Minimum length: 90 mm (3.5") Maximum length: 356 mm (14")
Folding capacity	V-fold - 10 sheets (max. 80 g/m²) C-fold/Z-fold - 8 sheets (max. 80 g/m²) Double V-fold - 4 sheets (max. 80 g/m²)
Envelope sizes	Standard BRE (Business Reply Envelopes)
Envelope quality	Minimum 80 g/m² (20 lb bond) Maximum 120 g/m² (30 lb bond)

Envelope and Document Set Specifications

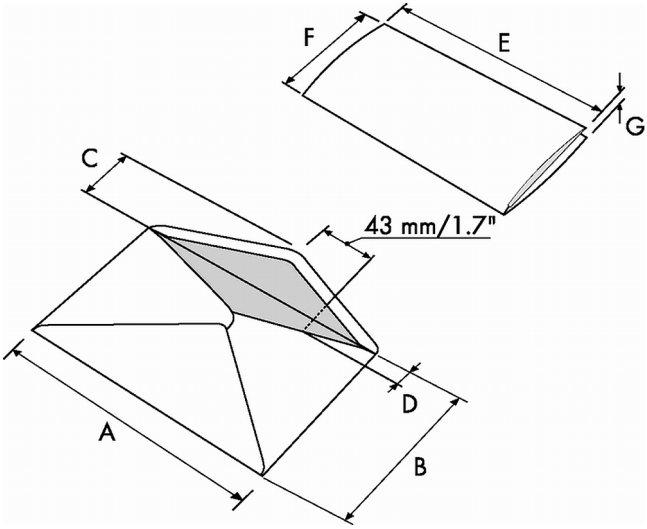

	A	B	C	D	E	F	G
Minimum size	160 mm 6.3”	90 mm 3.5”	32 mm 1.25”	10 mm 0.4”	-	84 mm 3.3”	60 g/m2

Maximum size	248 mm 9.7”	162 mm 6.38”	B-32 B-1.25	75 mm 2.9”	A-12* A-0.47**	B-6 B-0.2	2.5 mm 0.1”

* Booklets up to approximately 2 mm (0.08 inch) thickness, depending on stiffness

** When insert is more than 1 mm (0.04 inch): A-15 mm / A-0.6 inch

Remarks:

- The specification of the paper handling equipment is often wider than that of the envelopes and documents handled. The condition of material handled will limit the specified environmental conditions.
- We recommend that materials to be handled are stored at a temperature of 20°C (68°F) with a relative humidity factor of 50%. If difference in temperature occurs between store room and mailing area, the material has to be stored near the machine at least 24 hours before use.
- Self-copying paper may cause rubber parts to wear quicker. The rubber used in this machine has the best resistance to Wiggins Teape material.

maxiFeeder Specifications

Model	Model MF-1
Type	High capacity feeder
Theoretical max. speed	4000 inserts per hour, depending on application, see Technical Specifications on page 109
Power consumption	Low voltage supplied by the inserter system.
Approvals	EMC Certificate conform EMC-Directive. FCC Certificate conform 47CFR, part 15. UL Listed I.T.E. (Information Technology Equipment), conform UL-IEC 60950-1, file: E153801. Conform NEN-EN-IEC 60950-1 and derivatives.
Height	210 mm (8.3 inch)
Width	285 mm (11.2 inch)

Length	425 mm (16.7 inch)
Weight	5.05 kg (11.1 lbs)
Noise level	See Technical Specifications on page 109
Operating temperature	10°C - 40°C (50°F-104°F)
Humidity	30%-80%
Feed tray capacity	1200 sheets A4 80 gr. 320x Business Reply Envelopes
Document / BRE insert specifications	See Document Specifications on page 110 and Envelope Specifications on page 111.

High Capacity Vertical Stacker Specifications

Model	HCVS-1
Type	High Capacity Vertical Stacker. Suitable for all kinds of mail sets that consist of at least one 80 grams envelope and one folded document (80 gram).
Power consumption	Low voltage supplied by the inserter system.
Approvals	EMC Certificate conform EMC-Directive. FCC Certificate conform 47CFR, part 15. UL Listed I.T.E. (Information Technology Equipment), conform UL-IEC 60950-1, file: E153801. Conform NEN-EN-IEC 60950-1 and derivatives.
Height	550 mm (21.7 inch)
Width	440 mm (17.3 inch)
Length	360 mm (14.2 inch)
Weight	12 kg (26.5 lbs)
Noise level	See Technical Specifications on page 109

Operating temperature	10°C - 40°C (50°F-104°F)
Humidity	30%-80%
Stacker capacity	325 envelopes, depending on application.

12 Terminology

Terminology

Term	Description
Address carrier	The address carrier is the document that carries the address of the person for who the mail-set is meant. The address must remain visible while enclosures are added and the document-set is folded. The fold type and selected envelope must ensure that the address is visible behind the window in the envelope. For personalized mailings there is always an address carrier present as long as envelope printing is not supported. Normally there is one address carrier.
Address position	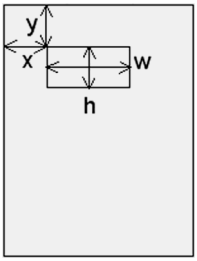 Position of the address on the address carrier, measured from the upper left corner. The address position consists of a horizontal x coordinate, a vertical y coordinate, a horizontal width w and a vertical height h.
Automatic	The feature of an Inserting System to automatically determine its Job settings by measuring the sizes of documents and envelope. From all Feeders that are loaded one sheet will be taken. Based on the maximum document length (which is also the length of the documentset) and the length of the envelope the fold type is determined.
Automatic job	A job that is created with the Automatic functionality.
Barcode Reading (BCR)	Barcode Reading is intended for reading and interpreting printed barcodes. The codes give information to the Inserting system about how to build-up and handle a set.
Business Reply Envelope (BRE)	Envelope included in outgoing mail-sets for addressee response purposes.

C-fold	Fold type in which a document-set is folded twice in which the folded flaps are on top of each other. This fold is illustrated in the picture below. 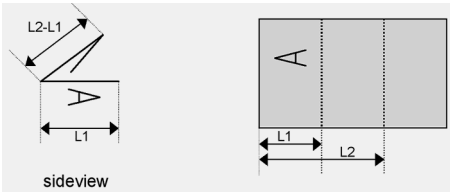 The position of both folds is adjustable. Synonym: Letter fold.
Clear	The function of an inserting system in which all mail-sets in progress are finished and the document path is left empty.
Conveyor stacker	Stacks up filled envelopes from the system.
Daily Mail	Capability of an inserting system to manually insert mail-sets one by one into the system, which are then inserted into an envelope. Optionally, depending on settings, additional enclosures can be added and the mail-set can be folded. This function is intended for small amounts of mail that each can have a different build-up.
Document	A document is one of the components of a mail-set. A document can consist of one or more sheets. Documents can be divided into address carriers and enclosures. For personalized mailings there is always one address carrier and an optional number of enclosures.
Document-set	The document-set is the physical collection of address carrier and enclosure(s) that is under production in the Inserting System. The document-set is completed during production and is to be inserted in the envelope. The number of enclosures can range from 0 to the limit opposed by the number of available Feeders. Once the document set has been inserted into an envelope it is called mail set.
Double Feed Control (DFC)	Double Feed Control is the sensor that measures the thickness of a sheet to check if the inserting system does not accidentally take more sheets than intended. DFC sensors exist on Feeders (double sheet detection). Currently DFCs on Neopost inserting systems perform relative measurements, which means that they need a cycle to 'learn' the thickness of a sheet. Also the length of the document is measured so partly overlapping sheets will be detected.
Double parallel fold	See double V-fold.

Double V-fold	The double V-fold is a type of fold where the document is first folded halfway and the resulting folded set is again folded halfway. This fold is illustrated in the picture below. 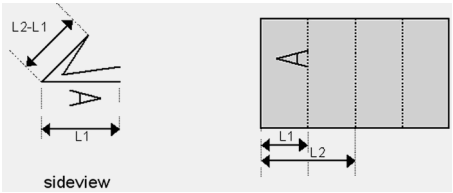 The position of both folds is adjustable. Synonym: double parallel fold.
Envelope	The envelope is the packaging of a mail set. Window envelopes are envelopes that have a transparent section through which the address on the address carrier can be read. Besides the normal top-closing window envelopes there are also bottom-closing envelopes.
Extended powerFold	Option, makes bottom address applications and short folds possible.
Face down	Situation in which the front of a sheet is facing downwards when placed in a document feeder.
Face down leading	Situation in which the front of a sheet is facing downwards and the top of the sheet is closest to the separation unit in a document feeder.
Face down trailing	Situation in which the front of a sheet is facing downwards and the bottom of the sheet is closest to the separation unit in a document feeder.
Face up	Situation in which the front of a sheet is facing upwards when placed in a document feeder.
Face up leading	Situation in which the front of a sheet is facing upwards and the top of the sheet is closest to the separation unit in a document feeder.
Face up trailing	Situation in which the front of a sheet is facing upwards and the bottom of the sheet is closest to the separation unit in a document feeder.
Feeder	A Feeder is a Module for the input of documents to the inserting system. The Feeder separates documents sheet by sheet from the stack of documents in the feed tray.
Feeder linking	The ability to load two feeders with the same document type where the Inserting System automatically switches to a second feeder when the first feeder is empty and vice versa. In the mean time the first feeder can be refilled, so the inserting system can keep running without having to stop for refilling the feeders.
Feed tray	Part of the feeder that contains the stack of documents.

Flexcode OMR	An OMR code for which the meaning of the OMR marks can be programmed in a dedicated way for a specific customer. This is normally used to support the OMR codes from other suppliers.
flexFeed	The flexFeed is the feeding part of the system.
High Capacity Document Feeder (HCDF)	Optional feeder with a capacity for up to 725 sheets.
High Capacity Vertical Stacker (HCVS)	Optional stacker that is mounted on the exit of the system, to stack filled envelopes.
Insert	• An insert is the action of inserting a document-set into an envelope. • For native English speaking customers an insert is also a short, not to be folded document, usually an enclosure.
Inserter	An Inserter is the Module where the document-set is inserted into the envelope, the envelope is closed and if necessary sealed.
Inserting system	The system of all the Modules that cooperate to perform the inserting function (accumulate document-set, fold and insert) and have a single point of control.
insert'n Frank / insert'n Mail (mailing machine)	Interface for the Neopost franking machine.
intelliDeck	To avoid stoppages the intelliDeck diverts duplicate on faulty documents before folding them while the system is still running.
Job	A job is an actually produced collection of mail-sets based on a certain Job Definition at a certain point in time for a specific purpose. It consists of: • The Job definition used for the production • Information about the batch size
Job counter	The counter that registers the number of mail-sets that is produced as part of a specific job.
Letter fold	See C-fold.
Linking	See Feeder Linking.

Loc	The Loc is the unit in the system that transports the envelope just after the document was inserted. It is called Loc (short for locomotive) as the early developments had a straight cover and a number of transportation rollers sticking out. This made it look like a locomotive from the side. In the current systems the loc also carries the brush holder and sealing rollers.
maxiFeeder	Feeder with high capacity feed tray (e.g. 1200 sheets A4 80gr).
Multifeed	The feature of an Inserting System in which more than one sheet is taken from a Feeder.
OMR	Optical Mark Recognition
OMR code definition	Standard 1-track OMR code definition. Specifies the amount of reading marks used and the functionality linked to each of them (how each should be interpreted).
Online Services (OLS)	The ability to connect the system to a central server for updates and other communication.
Operator	The person operating a document system.
Optical Mark Recognition (OMR)	Optical Mark Recognition is intended for reading and interpreting printed codes. These codes are one or more black marks which are read from a document. These marks give information to the Inserting system about how to build-up and handle a set.
powerFold	The powerFold can fold up tot 10 pages.
Reading error	Condition in which the system could not reliably read or interpret the OMR reading marks or barcode from a sheet.
Reading marks	Marks added to documents containing finishing instructions that can be identified by a reading head and interpreted according to the used OMR code definition.
Remote diagnostics	The feature that makes it is possible to analyze a problem on an Inserting System from a remote location.
Service engineer	Technical engineer whose task it is to resolve problems with systems in the field. Besides dealing with problems, service engineers are also responsible for preventive maintenance.
Single fold	See V-fold.
Stop counter	Counter which sets the amount of envelopes to be filled. After filling this amount of envelopes the system will stop (even during a clear).
Supervisor	Person who is responsible for the technical state of the machine. Normally a supervisor has access to programming functions, which are restricted for standard users.

Test run	A test run is intended to validate the settings of the Inserting System: • Inspect and adjust the stop position of the envelope. • Check the fold settings for one set. • Check if the address is correctly positioned behind the envelope window.
Thickness detection	Checks the thickness of the document set. If the thickness is less or more than the set value an error message is displayed.
Tray	Contains a stack of paper for a printer or inserter. This paper is supplied to the machine for further processing.
V-fold	A V-fold implies the document/set is folded once. The fold-position is adjustable. This fold is illustrated in the picture below: 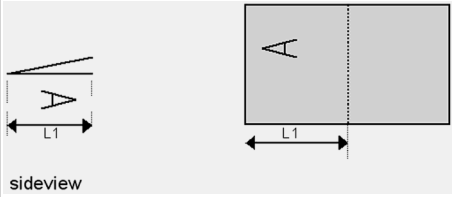 Synonym: Single fold.
versaFeeder	Booklet feeding device.
Vertical transport	The vertical transport section between feeders and collator.
Z-fold	A Z-fold means that a document is folded twice in such a way that each folded flap is on a different size of the folded document, resulting in a Z-shape. This fold is illustrated in the picture below. 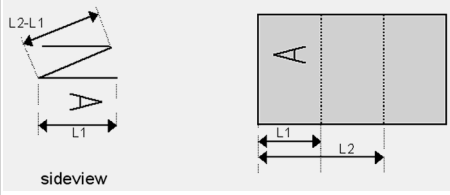 The position of both folds is adjustable. Synonyms: zigzag fold